Meeting Date: _____2/18/2026_____ Item: _____

Agenda Item Summary:

CO2 SYSTEM REPLACEMENT / RETROFIT OPTIONS

Summary: The system is essential for pH adjustment and water stabilization following the lime-softening process. The current system requires upgrades to ensure reliable delivery of gas to the treatment process. Staff has evaluated three primary options: a complete tank replacement, a mechanical retrofit of the existing system, or a long-term lease agreement.

Issue: The existing system components are nearing the end of their service life, necessitating a decision between high capital investment or ongoing operational maintenance.

Budget: This project was not included in the original budget; a budget amendment for FY26 will be required depending on the selected path.

Options for Consideration:

1. Full Tank Replacement: Total capital cost of $233,667.59.

2. System Retrofit: Replace vaporizer and install new pressure reducing valves for $35,480.81.

3. 7-Year Lease: Monthly payment of $425.00 which includes all tank maintenance and inspections for the entire contract.

Final: We respectfully request the City Council review the provided options and approve the lease option to ensure we are able to maintain water treatment operations as quickly as possible.

PRODUCT RIDER

This Rider, dated as 02-04-2026 (the “Effective Date”), is made a part of the agreement between Charles City Water Treatment Plant ("Buyer") and Central McGowan, Inc. ("Seller") numbered F25542 and dated 02-04-2026 (the "Agreement"). This Rider, as of the Effective Date supersedes any and all previous Riders covering the supply of Product to Buyer’s Location.

As to this Rider, the following terms will have the meanings set forth below:

“*Product”* means: Liquid Carbon Dioxide

"Address" means:

For Seller:	For Buyer:	
CM2 Supply	Customer Name:	Charles City Water Treatment Plant
123 Roosevelt Road	Ship To Street	1709 Indiana Ave
St Cloud, MN 56301	Ship to City,ST ZIP:	Charles City, IA 50616
Attn: Contract Administrator	Ship to contact	Cory Spieker (641-426-8188)
	BILLING ADDRESSS CITY, ST. ZIP	City of Charles City 900 Clark St, Charles City, IA 50616
Telephone: (320) 252-5292	A/P Contact	Ginny titus
Fax: (320) 252-7807	A/P Telephone	641-257-6300
	A/P Fax	
	A/P Email	ginny@cityofcharlescity.com

"Basic Term" means the period commencing on the Effective Date and continuing for **7 years** following First Delivery to the Supply System. *OR, IF SUPPLY SYSTEM IS ALREADY IN USE,* means the period commencing on the Effective Date and continuing for 7 years.

"Buyer's Location" means 1709 Indiana Ave, Charles City, IA 50616

“Seller’s Shipping Point” means 123 Roosevelt Road, St Cloud MN 56301

"Supply System" means, as to the following Supply System(s):

Item No.	Description	Pressure At Battery Limits (psig)	Average Flow Rate (cfh)	Peak Flow Rate (cfh)	Peak Flow Duration (hours/day)
1	4 ton Bulk System	350	11-15 lbs per hour		N/A
2					N/A

The costs associated with installing each Supply System and connecting it to Buyer’s Product distribution system, including, without limitation, any transportation and rigging costs, will be borne by Seller.

"Prices" are:

Supply System Item No.	Charge per LB Feet of Product	Monthly Service Charge (Rent)	Delivery Charge	Telemetry/Mo
1.Perma-Max 4-ton	**$0.235 per Pound**	**$425.00**	**$50.00**	
			$8.95 Hazmat fee **$5.00 fuel surcharge Does Fluctuate**	

The Monthly Service Charge and Monthly Demand Charge for each Supply System are billed in advance, and will commence on the earliest of the following dates: (a) First Delivery of Product to or from such Supply System, (b) thirty (30) days after the date such Supply System is delivered to Buyer's Location. Invoicing will be done by Buyer's standard billing method. Prices stated for the Monthly Service Charge are firm for the period of the Basic term. Prices for the Charge per Pound are firm for a period of twelve (12) months from date below. Following this firm period, any potential Price Actions will NOT exceed Four percent (4 %) per year during the Basic Term or any Subsequent Renewal Term. Seller will have the right to adjust Prices once per year, prior to the end of the fiscal year, to facilitate the Buyer's budgeting process for the following year. Fiscal year end to be assumed to calendar year end unless otherwise stipulated by the Buyer.

As to the supply of Product pursuant to this Rider, Buyer and Seller further agree as follows:

1. MONTHLY VOLUMES

Buyer has estimated that Buyer's monthly consumption of Product will be approximately 4500 Pounds. (the "Estimated Monthly Volume). To the extent that Buyer has requirement for Excess Product and Seller has Excess Product available for Buyer, Buyer will purchase such requirements from Seller. In any and all events, the Buyer will only be invoiced for Product(s) and/or Service(s) delivered.

2. MODIFICATIONS TO AGREEMENT

IN WITNESS WHEREOF, the parties have caused this Rider to be executed as of the date written above.

CITY OF CHARLES CITY WTP	**CENTRAL MCGOWAN, INC**
X: _____	Submitted by: Kole Young
By: _____Tyler Trout_____	Accepted by: Greg "Woody" Orinstien
Title: _____City Administrator_____	Title: Sales Manager, Co2 Solutions/Beverage Carbonation
Date: _____	Date: _____

PRODUCT SUPPLY AGREEMENT

THIS AGREEMENT numbered F25542 and dated: 02-12-2026 is made by and between CM2 SUPPLY, INC., a Minnesota corporation, having an office at 123 Roosevelt Road, St Cloud, Minnesota 56301 (hereinafter called "Seller") and Charles City Water Treatment Plant. , having an office at 1709 Indiana Ave, Charles City, IA 50616 (hereinafter called "Buyer").

W I T N E S S E T H:

In consideration of the mutual promises contained herein, the parties intending to be legally bound agree as follows:

1. DEFINITIONS

In this Agreement, the terms "Address," "Basic Term," "Buyer's Location," “Cylinders,” "Prices," "Product," "Seller’s Shipping Point," "Specifications" and "Supply System" will have the respective meanings set forth in the Rider(s) duly executed by the parties and made a part hereof. The term "First Delivery" means the date on which Seller first delivers Product to Buyer, which date will in no event be earlier than the date on which Buyer is no longer obligated to purchase Product for Buyer’s Location under the terms of any other contract. In addition to the meaning of the term "Supply System" set forth in the Rider(s), the term "Supply System" means a system located at Buyer's Location which is owned Seller for the supply of Product to Buyer hereunder and which may be comprised of storage units, vaporizers, piping, controls and other equipment, devices and/or instrumentation as deemed appropriate by Seller.

2. REQUIREMENTS

Seller will sell to Buyer, and Buyer will purchase from Seller, on the terms and conditions hereinafter set forth, Buyer's total present and future requirements, in gaseous and liquid form, of Product for use at Buyer's Location(s). As to each Rider, Buyer represents and warrants to Seller that as of First Delivery Buyer will not be obligated under the terms of any other contract to purchase Product for Buyer's Location. In the event the foregoing representation and warranty proves to be false, Buyer hereby indemnifies and holds harmless Seller from and against all costs, damages or liabilities which Seller may incur in connection with any claim or claims asserted by any third party as a result thereof.

3. PRICES AND PAYMENT

Seller will invoice Buyer by Seller's standard billing methods and Buyer will pay Seller the Prices, charges and surcharges for Product, equipment or services supplied hereunder. In addition, Buyer will pay or reimburse Seller for any sales, property, use, excise, or other tax now or hereafter imposed by reason of any sale, delivery or furnishing of any Product, equipment, or services hereunder. Terms of payment will be net thirty (30) days following date of invoice. If Buyer fails to make timely payment in accordance with the terms of this Agreement, or its financial responsibility becomes otherwise impaired, Seller reserves the right, among other remedies, to refuse to supply Product except for receipt of cash with order and/or payment in full of all outstanding charges, and/or assess and collect from Buyer a monthly late charge on any delinquent balance equal to the lesser of eighteen percent (18%) per annum or the maximum charge permitted by law, and/or enter Buyer’s premises and remove any Supply System, Cylinders or other Seller’s equipment located thereat with or without notice of legal process, and/or terminate this Agreement or any Rider. If any action is required to collect Buyer’s delinquent account, recover any Cylinders or otherwise enforce the terms and conditions of this Agreement, Buyer will pay Seller all fees and costs of such collection, recovery or enforcement including, without limitation, legal fees.

4. **DELIVERY**

Seller will deliver to Buyer Buyer's requirements for Product in accordance with the terms of this Agreement. Product in Cylinders will be delivered F.O.B. point of shipment. Seller may anticipate Buyer's requirements for Product and deliver Product at such times as are consistent with Seller's delivery schedule. The delivery of Product by Seller will constitute Buyer's purchase thereof, and the quantities delivered will be measured by Seller by the method it regularly uses for the type of delivery made. If Seller is requested by Buyer and is able to make deliveries during a strike or other concerted acts of workers affecting Buyer, then such deliveries will be made at Buyer's sole risk and, notwithstanding anything in this Agreement to the contrary, Buyer hereby indemnifies and holds harmless Seller from and against all costs (including legal fees), damages, liabilities or claims arising out of any such deliveries.

5. **SUPPLY SYSTEMS AND SUPPLY SYSTEM SITES**

Buyer, at its expense, will provide a suitable site for each Supply System free from any underground or overhead obstructions and with access by road, construct a suitable foundation for each Supply System as specified by Seller, and install necessary fencing adequate to prevent tampering. If subsequent to the date of this Agreement any new local, state or federal law, rule or regulation requires modification to any Supply System or Supply System site, or any additional permits, licenses or rights are required, any costs associated with performing such modifications or obtaining such permits, licenses or rights will be borne by Buyer. If any Supply System or Cylinder is damaged by Buyer, its agents, employees, contractors or invitees, the cost of repairing such Supply System or Cylinder will be borne by Buyer. Buyer will prevent persons other than those authorized by Seller from entering any Supply System site, delaying delivery of Product, or altering, repairing, adjusting or otherwise tampering with any Supply System or Cylinder.

Seller will install each Supply System and make the connection to Buyer's Product distribution system. The costs associated with installing each Supply System and connecting it to Buyer’s Product distribution system, including, without limitation, transportation and rigging costs, will be borne by the party specified in the Rider. Seller will, at Buyer’s expense, remove each Supply System within a reasonable time after the termination of this Agreement with respect to the Rider covering such Supply System. Seller may at its expense remove any Supply System or part thereof, and replace it with another Supply System or part thereof, as Seller may deem appropriate for the supply of Buyer's requirements. Seller will have the right from time to time to shut down each Supply System for such period of time as may be necessary for repairs and maintenance consistent with proper operation. If a maintenance shutdown of Supply System is necessary, Buyer will be notified in advance and a proper backup supply system will be in place as not to affect Buyers production schedule. Each Supply System or Cylinder will remain the property of Seller at all times. Buyer will hold harmless Seller from and against liens and claims against each Supply System or Cylinder due to its location on Buyer's premises.

If Buyer no longer has Product requirements under any Rider for the remainder of the Basic Term of such Rider, Buyer may request Seller to remove any Supply System covered by such Rider, prior to the expiration of such Basic Term. Seller will remove such Supply System provided that (a) Buyer reimburses Seller for any removal expenses relating to such Supply System, and (b) in the event that following the removal of such Supply System Buyer's need for Product resumes at any time within the Basic Term of the Rider covering such Supply System, such Rider will be reinstated, the Basic Term of such Rider will be deemed extended by the number of days that such Supply System was removed from Buyer's Location and Buyer will reimburse Seller for the cost of reinstalling the Supply System. If Seller relocates, modifies or replaces all or part of any Supply System due to a change in Buyer's requirements, method of supply, pressure specifications, Buyer's Location or Buyer's facilities, Seller may charge Buyer the cost of such relocation, modification or replacement, adjust the Monthly Service Charge set forth in the Rider covering such relocated, modified or replaced Supply System, and extend the term of such Rider effective upon First Delivery to or from the relocated, modified or replacement Supply System for a period equal to the Basic Term of such Rider.

Each Cylinder furnished by Seller will remain the property of Seller at all times. Buyer will pay Seller for cleaning any Cylinder if such Cylinder is contaminated when returned to Seller. Buyer will return each Cylinder to Seller within thirty (30) days following the termination of this Agreement or pay Seller the replacement value thereof. Buyer will cooperate with Seller to protect, locate and recover each Cylinder

furnished to Buyer hereunder. Buyer's obligations under this paragraph will survive the termination of this Agreement.

6. SPECIFICATIONS

Product delivered hereunder will meet the Specifications. Buyer may reject any Product which does not meet the Specifications and no charge will be made for Product so rejected. Since Buyer may obtain devices which have the capability of testing whether Product meets the Specifications, no claim of any kind with respect to the conformance of Product to the foregoing Specifications, whether or not based on negligence, warranty, strict liability or any other theory of law, will be greater than the price of the quantity of nonconforming Product in respect to which such claim is made. The foregoing constitutes Buyer's exclusive remedy and Seller's sole obligation with respect to any such claim. THERE ARE NO EXPRESS WARRANTIES BY SELLER OTHER THAN THOSE SPECIFIED IN THIS ARTICLE 6. NO WARRANTIES BY SELLER (OTHER THAN WARRANTY OF TITLE AS PROVIDED IN THE UNIFORM COMMERCIAL CODE) WILL BE IMPLIED OR OTHERWISE CREATED UNDER THE UNIFORM COMMERCIAL CODE INCLUDING WITHOUT LIMITATION WARRANTY OF MERCHANTABILITY AND WARRANTY OF FITNESS FOR A PARTICULAR PURPOSE.

7. PRICE CHANGES

Seller will have the right to adjust the Prices by giving Buyer not less than Sixty (60) days prior written notice of the effective date of such adjustment; provided, however, that if said Prices are increased and Buyer, within Thirty (30) days after said notice, furnishes Seller with credible written evidence that Buyer can purchase Product to which such increased Prices apply from a responsible supplier for a specified term in like quantities at lower prices under similar terms and conditions, and Seller, within Thirty (30) days thereafter, does not agree to either meet said lower prices or rescind the notice of increased Prices, Buyer will have the right within Thirty (30) days thereafter to terminate this Agreement as to the supply of Product for which such lower prices are offered by giving Seller not less than Thirty (30) days prior written notice. If Seller agrees to meet the lower prices or rescind the notice of increased Prices, Seller may extend the term of the Rider covering such Product for a period equal to the period of the Basic Term of such Rider. Any adjustments made by Seller pursuant to this Article 7 with respect to any Monthly Service Charge or Monthly Rental set forth in the Rider or to surcharges or other charges which arise pursuant to Article 3 will not be subject to the proviso contained in the first sentence of this Article 7.

8. CONTINGENCIES

Neither party hereto will be liable to the other for default or delay in the performance of any of its obligations hereunder (except any obligation to make payments when due) due to act of God, accident, fire, flood, storm, riot, war, sabotage, explosion, strike, disease, epidemic, pandemic, concerted acts of workers, national defense requirements, governmental law, ordinance, rule or regulation, whether valid or invalid, extraordinary equipment failure, inability to obtain electricity or other type of energy, raw or finished material or feedstock from normal sources of supply, labor, equipment or transportation, or any similar or different contingency beyond its reasonable control which would make performance commercially impracticable whether or not the contingency is of the same class as those enumerated above, it being expressly agreed that such enumeration is non-exclusive; provided, however, that neither business downturn nor economic conditions will qualify as a contingency within the meaning of this Article 8. In the event any such contingency affects only a part of Seller's capability to produce and/or deliver Product, Seller will allocate production and/or deliveries among the requirements of all its affected customers and Seller's own requirements in a fair and reasonable manner. Buyer will pay or reimburse Seller for any additional costs incurred relating to the delivery of any Product to Buyer during a contingency. During any period, that delivery of Product is interrupted or reduced due to a contingency hereunder, the Basic Term will be extended for a period equal to two (2) times the duration of the contingency.

9. HEALTH, SAFETY AND LIABILITY

Buyer acknowledges that there are hazards associated with Product, including, without limitation, the storage, use and handling thereof, and Buyer agrees that its personnel concerned with Product are aware of such hazards. Buyer assumes all responsibility for the suitability and the results of using Product alone or in combination with other articles or substances and in any manufacturing, medical, or other process or procedures. Buyer will be responsible for complying with all relevant reporting obligations under all applicable laws, including, without limitation, the Emergency Planning and Community Right-to-Know Act of 1986, 42 U.S.C. Sections 11001-11049 [EPCRA, also commonly known as Title III of the Superfund Amendments and Reauthorization Act of 1986 (SARA Title III)], that result from the presence at Buyer's Location(s) of Product supplied under this Agreement. Buyer will warn and protect its employees, independent contractors and others exposed to the hazards posed by Buyer's storage, use and handling of Product. Seller will provide documents to Buyer containing Seller's safety and health information pertaining to Product, including Seller's Material Safety Data Sheet(s), and Buyer will incorporate such information into Buyer's safety program. Seller will not be liable to Buyer for any incidental, consequential, indirect or special damages. Each party hereby indemnifies and holds harmless the other party from any actions, lawsuits, demands, claims, losses, expenses, costs (including legal fees) and damages arising from the injury, illness or death of the indemnifying party's employees in any way related to Product supplied by Seller under this Agreement, whether or not such injury, illness, or death is claimed to have been caused by, resulted from, or was in any way connected with the negligence of the party to be indemnified.

10. **CONFIDENTIALITY**

~~This Agreement, including the Rider(s) and any addendum hereto, and all drawings, diagrams, specifications, operating data, pricing and costs and other materials furnished by either party to the other in connection therewith, and the information therein are proprietary to the disclosing party. Such materials contain trade secrets and other confidential information of the disclosing party. The receiving party may not reproduce or distribute such materials except (a) to governmental agencies for the purpose of obtaining permits under Article 5, and (b) to the receiving party's employees for the purpose of performing the receiving party's obligations under this Agreement. In the case of any of the aforementioned disclosures, the receiving party will inform its employees or governmental agencies that such information is the confidential information of the disclosing party and is to be treated accordingly. All such information (except information as may be established to be in the public domain) will be received in confidence by the receiving party, and the receiving party will exercise the same degree of care to hold such information in confidence as it uses with respect to its own trade secrets and/or confidential and proprietary information. Unless otherwise agreed to by the parties, the receiving party will keep all such information confidential for a period which will expire five (5) years after the termination date of this Agreement. Notwithstanding anything herein to the contrary, Buyer hereby grants to Seller the right to reasonably use the Supply System(s) for promotional purposes, including visits to the Supply System site(s) by Seller with third parties. Each such promotional use, however, will be subject to Buyer's approval, which approval will not be unreasonably delayed or withheld.~~

11. **ASSIGNMENT**

Any assignment of this Agreement by either party without the prior written consent of the other party, which consent will not be unreasonably delayed or withheld, will be void; provided, however, that Seller will have the right without Buyer's consent to assign this Agreement to any affiliate of Seller, or any party obtaining all or substantially all of the business assets of Seller. If Buyer sells or otherwise transfers or conveys all or substantially all of the assets relating to the operations at Buyer’s Location(s), Buyer will, as a condition precedent to the closing of such sale, transfer or conveyance, require the purchaser or transferee to assume all of the rights and obligations of Buyer under this Agreement. This Agreement will inure to the benefit of, and be binding upon, the respective heirs, representatives, successors, including any by way of merger or consolidation, and permitted assigns of the parties.

12. **NOTICES**

All notices, unless otherwise provided herein, will be in writing and deemed given on the date the notice is hand delivered, mailed or electronically transmitted to the receiving party at such party's Address. Either party may change its Address upon notice to the other party as set forth herein.

13. **TERM**

Except as provided in Articles 3, 5 and 7 or the Rider(s), this Agreement will be in effect from the date hereof and will continue in effect thereafter as to each Rider for the period of the Basic Term, and will continue in effect thereafter as to such Rider until either party terminates such Rider effective upon the expiration of the Basic Term thereof by giving to the other party not less than Six (6) months prior written notice of termination with respect to such Rider or, if either party does not so terminate such Rider upon the expiration of the Basic Term thereof, such Rider will continue in effect thereafter for 12 Months successive renewal until either party terminates such Rider effective upon the expiration of any Renewal Term by giving the other party not less than Six (6) months prior written notice of termination with respect to such Rider.

14. **GENERAL**

The entire agreement is contained herein and, in the Rider,(s). There are no other promises, representations or warranties affecting this Agreement, and any other or different terms or conditions in any purchase orders, Buyer's website agreements (including, without limitation, any terms or conditions subject to an accept button or other similar means of indicating acceptance) or other documents issued or accepted hereunder will be deemed null and void. No modification or waiver of this Agreement will bind either party unless expressly set forth in writing and manually signed and accepted by an authorized representative of the party sought to be bound by such writing. A waiver of any of the terms and conditions hereof will not be deemed a continuing waiver, but will apply solely to the instance to which the waiver is directed. Any headings contained in this Agreement are used only as a matter of convenience and reference, and are in no way intended to define, limit, expand or describe the scope of this Agreement. In the event of conflict between the terms and conditions contained in this Agreement and the Rider(s), the terms and conditions of the Rider(s) will govern. This Agreement will be governed by the laws of the State of Minnesota.

IN WITNESS WHEREOF, the parties have caused this Agreement to be executed as of the date first above written.

City of Charles City WTP	**CENTRAL MCGOWAN, INC**
X: _____	Submitted by: Kole Young
By: Tyler Trout	Accepted by: Greg “Woody” Orienstien
Title: City Administrator	Title: Sales Manager, Co2 Solutions/beverage Carbonation
Date: _____	Date: 02-12-2026

TOMCO Systems
3340 Rosebud Rd,
Loganville,
GA,
30052-7341,
tomcosystems.com

Estimate
ES651

Service Address

Cory Spieker
City of Charles City WTP
WT842
900 Clark Street,
Charles City,Iowa, 50616
cory@cityofcharlescity.com

Summary

Installation of new vaporizer and safety replacement on CO2 storage tank. Quote is for (2) technicians onsite for 3 days, travel, and related expenses.

Service & Part	Quantity	List Price	Line Item Amount
Onsite Labor (Standard)	48.0	$ 225.00	$ 10,800.00
Travel Hours	22.0	$ 125.00	$ 2,750.00
Vehicle Mileage	1473.0	$ 1.25	$ 1,841.25
Expenses	10.0	$ 300.00	$ 3,000.00
PBV101, M259 VAP 12KW 460/60/3 STD	1.0	$ 14,599.50	$ 14,599.50
0370-6, SAFETY,3/4", PN 83S1M68-8-CO2-T,350 PSI	1.0	$ 1,590.06	$ 1,590.06
Misc Parts Vaporizer piping and materials	1.0	$ 900.00	$ 900.00
SN, Shipping ***TBD***	1.0	$ 0.00	$ 0.00

Sub Total	$ 35,480.81
Adjustment	$ 0.00
Grand Total	$ 35,480.81

Customer Notes

Any parts or additional time required to effect repairs are not included.

Terms and Conditions

TERMS AND CONDITIONS OF SALE AND LIMITED WARRANTY
SUPERSEDES ALL PREVIOUS TERMS AND CONDITIONS OF SALE

These terms and conditions form a part of and are incorporated into all sales by TOMCO2 Systems® Company ("Seller") of goods and services.

ACCEPTANCE OF TERMS AND CONDITIONS
The acceptance of the terms and conditions contained herein is an essential prerequisite to any contract of sale made by Seller. NO TERMS OR CONDITIONS OTHER THAN THOSE STATED HEREIN, AND NO AGREEMENT OR UNDERSTANDING, ORAL OR WRITTEN, IN ANY WAY PURPORTING TO MODIFY THESE TERMS AND CONDITIONS, WHETHER CONTAINED IN BUYER'S PURCHASE OR ACCEPTANCE DOCUMENTS, SHIPPING RELEASE FORMS, OR ELSEWHERE, SHALL BE BINDING ON SELLER WITHOUT SELLER'S EXPRESS WRITTEN CONSENT; ANY SUCH ATTEMPTED MODIFICATIONS ARE HEREBY REJECTED BY SELLER. UNDER ANY AND ALL CIRCUMSTANCES, SELLER'S ACCEPTANCE OF BUYER'S ORDER IS EXPRESSLY CONDITIONED ON BUYER'S ASSENT TO THE TERMS AND CONDITIONS CONTAINED HEREIN, AND SELLER OBJECTS TO ANY ADDITIONAL OR DIFFERENT TERMS PROPOSED BY BUYER. NO MODIFICATIONS OF THE TERMS AND CONDITIONS CONTAINED HEREIN SHALL BE BINDING UPON SELLER WITHOUT THE EXPRESS WRITTEN CONSENT OF SELLER. Buyer's action in (a) accepting any goods manufactured and delivered hereunder, or accepting any services from Seller, or (b) accepting or confirming any order without disaffirmance of these terms and conditions within three (3) business days of acceptance or confirmation of the order (and in the case of such disaffirmance no contract shall be deemed to exist between the parties), shall constitute an unqualified acceptance by Buyer of the terms and conditions contained herein.

PRICES AND PAYMENT TERMS
Prices quoted are valid for thirty (30) days from the date of quote, unless withdrawn or modified earlier by Seller. All prices are otherwise subject to change without notice, until the order is accepted by Seller. Prices do not include applicable local, state, federal or international taxes, tariffs, or duties (all of which shall be Buyer's responsibility), and do not include any freight costs or insurance unless otherwise agreed to in writing between the parties. The purchase price must be paid upon Seller's tender of delivery or completion of performance of the services, or in accordance with terms otherwise expressly agreed between the parties and as reflected on Seller's invoice, without deductions, set-offs, counterclaims, back charges, or any other charges of whatever nature, unless agreed in writing by Seller. Any credit orders are subject to credit approval. Payment for any agreed upon holdbacks must be paid upon completion of goods or services, but in no event later than nine (9) months after completion. If any invoice or part thereof is not paid when due, Buyer shall pay a finance charge in the amount of 1.5% per month (but not exceeding the maximum interest rate permitted by law). If Seller is required to institute legal proceedings or assign the collection to a collection agency for collection of any invoice or part thereof, Buyer shall be liable for all collection costs including legal fees incurred.

After Seller's confirmation of an order, Seller's costs for manufacturing, selling, or delivery any products or services may increase due to changes in exchange rates, taxes, duties, or other governmental charges or due to any material and unforeseen cost increases for materials, consumables, parts, wages, or insurance, and Seller shall have the right to change the price for the products or services accordingly. Such price changes shall apply for any products or services delivered after the implementation of the price change, irrespective of any separate agreement on price and irrespective of when the order was made. Seller shall notify Buyer of such price increases and Buyer shall be entitled to cancel any orders affected by the price increase, provided that such cancellation is made by written notice to Seller within three (3) business days from Seller's notification.

CHANGE ORDERS
Buyers may modify a purchase order only if approved by Seller in writing. Change order requests must be in writing and made through Seller's commercial sales department. Change order requests require review and approval by Seller's engineering, material control, manufacturing, and credit departments. Change orders may be subject to price and/or schedule adjustment. Other change order terms may be set forth in the proposal, such as changes in specifications or scope of services, delivery date, delivery location or quantity of goods. A minimum of $100 will be charged for each change order processed. Change orders requiring engineering changes will be assessed at a minimum of $200.

DELIVERY
Seller shall use reasonable efforts to adhere to the delivery or project completion schedule specified on the order acknowledgment, but delivery or project completion may be subject to change. Delivery of all goods is EXWORKS (Incoterms 2020) Seller's Loganville, GA factory. Risk of loss and title shall transfer to Buyer upon delivery to carrier. If Seller believes it will be unable to comply with the delivery or completion schedule, Seller will promptly notify Buyer of the probable length of any anticipated delay and the reason for it and shall continue to notify Buyer of any material change in the delivery. Seller shall not be liable for any damage caused by a delay in delivery or completion, irrespective of the cause of delay. If Seller is unable to comply with the delivery or completion schedule, Seller will exercise reasonable efforts to expedite routing or other factors to minimize such a delay. Any changes in the method of shipment (such as by air freight) will be at Buyer's written direction and expense.

CANCELLATION
Cancellation of any order or portions thereof will not be accepted after material has been purchased or fabrication has started and will subject Buyer to special, direct, indirect, and consequential damages.

CLAIMS
Seller will not be responsible for handling, storage, demurrage or any other transportation or accessorial service on orders for shipment outside the United States.

TOLERANCE & VARIATIONS
Unless otherwise expressly agreed by Seller in writing, all goods will be subject to tolerances and variations consistent with usual trade practices regarding dimensions, straightness, section, composition and mechanical properties and normal variations in surface and internal conditions and quality and will also be subject to deviations from tolerances and variations consistent with practical testing and inspection methods.

FILINGS
Buyer has no property interest in the goods until shipped. Seller retains purchase money security interest in goods sold to Buyer until the purchase price is paid in full, and Buyer agrees and authorizes Seller to file a financing statement or any other document(s) that may be necessary to perfect or provide other record notice of Seller's interest in the goods.

INSPECTION AND ACCEPTANCE
Buyer will inspect the goods (or any services) immediately upon delivery to the first shipment destination (or the completion of any services) and notify Seller in writing not later than five (5) days after delivery (or the completion of any services, if applicable) of any defects or non-conformities. All goods are deemed to have been accepted if timely notice is not given. Buyer shall notify Seller in writing of any disputes relating to any invoice within fifteen (15) days after the invoice date, specifying the nature of the disputed item. All invoices are deemed to be accepted and undisputed if timely notice is not given.

LIMITED WARRANTY
Seller warrants to the first end use purchaser of all goods sold by Seller or services performed hereunder, that: (i) such goods will be free from defects in materials and workmanship and will perform in accordance with Seller's standard specifications under normal conditions of installation and use; and (ii) such services will conform to the contract specifications, for claims that first arise and are reported to Seller within the applicable warranty period as set out below. All warranty coverage periods run from the date of shipment of the goods to the original purchaser or the completion of any services.

Wastewater Treatment Equipment: for a period of twelve (12) months from date of invoice;

Bulk, Microbulk and PLCs: for a period of twelve (12) months or five (5) years for vacuum, from invoice if used, operated, and maintained according to Seller's written instructions.

All other Equipment: for a period of twelve (12) Months from date of invoice, except pelletizers, block presses, reformers and CM-35 pump, if used, operated, and maintained according to Seller's written instructions will be warranted based on hour usage (2,000 hours).

Other: All other parts, components, accessories, and services are warranted by the Seller for a period of ninety (90) days.

This limited warranty does not cover damage caused by 1) improper installation (except when installation is done by Seller) or operation, the failure to follow Seller's instructions, or the failure to comply with applicable industry or commercial practices relating to the use of any goods or implementation of (or reliance on) any services; 2) misuse or negligence; excessive wear and tear; dents or deformation of the outer jacket, neck tube, and foot ring; corrosion, fire, or heat; 3) shipping damage; 4) repairs or attempted repairs by any person other than an authorized service technician; 5) repairs using spare parts not provided by Seller; 6) failure of Buyer or its end user to conduct normal and routine maintenance on goods or components in accordance with the operations manual; 7) improper or unauthorized modifications to goods or components; or 8) accident, catastrophe, or act of God. Further, this limited warranty does not cover or apply to any services, goods, accessories, parts, or attachments which are provided or manufactured by any party other than Seller (such as valves and related fittings, regulators, gauging devices, hoses, and hose-end connections and similar equipment), except that Seller assigns (without recourse) any manufacturers or third-party warranty applicable to such goods.

THE ABOVE EXPRESS LIMITED WARRANTY IS THE SOLE AND EXCLUSIVE WARRANTY PROVIDED BY SELLER, AND THERE ARE NO WARRANTIES WHICH EXTEND BEYOND THE DESCRIPTION ON THE FACE HEREOF. ALL OTHER WARRANTIES, EXPRESS OR IMPLIED, STATUTORY, OR OTHERWISE ARE EXCLUDED AND DISCLAIMED, INCLUDING MERCHANTABILITY OR FITNESS FOR A PARTICULAR PURPOSE

Unless expressly agreed to in writing by Seller, this limited warranty extends only to the first-end purchaser and is not thereafter assignable. Any transfer of the goods by the first-end use purchaser during the limited warranty period voids this limited warranty.

BUYER'S REMEDIES
The SOLE AND EXCLUSIVE REMEDY under the Limited Warranty is the repair or replacement of the goods (or refund of the purchase price if Seller deems the repair or replacement of the goods to be impracticable), or the correction of the services (or a refund of the purchase price if Seller deems such corrections to be impracticable), at Seller's sole option. Goods should not be returned, repaired, or discarded without Seller's prior written consent.

LIMITATIONS ON LIABILITY
THE REMEDIES SET FORTH HEREIN ARE EXCLUSIVE. SELLER SHALL NOT BE LIABLE FOR ANY INDIRECT, CONSEQUENTIAL, SPECIAL, OR INCIDENTAL DAMAGES, OR OTHER COSTS, EXPENSES OR DAMAGE, INCLUDING WITHOUT LIMITATIONS, LOSS OF USE, LOST BUSINESS OR REVENUE. IN NO EVENT, REGARDLESS OF THE FORM OF THE CLAIM OR CAUSE OF ACTION (WHETHER BASED IN CONTRACT, NEGLIGENCE, STRICT LIABILITY, TORT OR FROM ANY OTHER CAUSE WHATSOEVER SHALL SELLER'S LIABILITY EXCEED THE ORIGINAL PURCHASE PRICE OF THE GOODS OR SERVICES (LESS ANY UNPAID PORTION THEREOF). BY ACCEPTING DELIVERY OF THE GOODS OR SERVICES SOLD HEREUNDER, THE BUYER ACCEPTS THESE LIMITATIONS AS REASONABLE AND ENFORCEABLE.

STORAGE FEES
Buyer is responsible for all storage fees incurred to store completed goods or in-process goods that are delayed by Buyer at the then current rate for monthly storage. Extended storage will not be allowed without a temporary storage agreement wherein Buyer acknowledges (i) the storage rate, (ii) length of storage and (iii) that Seller has no obligation or responsibility for goods other than to keep said goods segregated for Buyer. Payment of goods pursuant to the original purchase order, along with the first month's storage fees, must be provided by Buyer upon signing the storage agreement. Storage is subject to availability. If Buyer breaches such temporary storage agreement, Seller may exercise all rights and purchase money or storage liens it may have under the law. Buyer will be responsible for all insurance on the goods and property tax. The Limited Warranty period is as defined in this document and is NOT extended while the goods are in storage.

WARRANTY CLAIMS
To make a claim under the limited warranty, the Buyer must 1) give Seller written notice within three (3) business days after discovery of a claimed defect; 2) immediately discontinue use of the goods or reliance on the services; and 3) if instructed to do so, return such goods freight prepaid within twenty (20) days to the location specified by Seller for evaluation to validate the warranty claim.

Prior to returning goods to Seller, a returned good authorization (RGA) number must be obtained from the Customer Service Department. Goods must be returned with prepaid transportation charges to:

TOMCO SYSTEMS COMPANY
3340 Rosebud Road
Loganville, GA 30052 USA

Returned goods packages must include the following information: 1) Company Name; 2) Company address; 3) Contact name; 4) Contact telephone number/email; 5) Quantity, description, model number and, if applicable, a serial number of each item being returned; 6) reason for return; 7) original Seller sales order number, invoice number or Buyer purchase order number; and 8) RGA number must appear on the shipping label and packing slip.

INTELLECTUAL PROPERTY
All copyrights, patents, trademarks, trade secrets, know-how and other intellectual property or proprietary rights pursuant to the laws of any jurisdiction worldwide ("IP Rights") associated with or relating to the goods shall belong solely and exclusively to Seller. Seller will retain all IP Rights used to create, embodied in, used in, and otherwise relating to the goods and any of their component parts manufactured by Seller, and Buyer shall not acquire any ownership interest in any of Seller's IP Rights. Buyer shall use Seller's IP Rights only in accordance with these terms and conditions of sale and any instructions of Seller. If Buyer acquires any IP Rights in or relating to any goods by operation of law or otherwise, such rights are deemed and are hereby irrevocably assigned to Seller without further action. Buyer shall, at Seller's expense, execute such documents and do such things as are necessary to enable

Seller to protect its IP Rights.

COMPLIANCE WITH LAWS
Buyer agrees to abide by all federal, state and local laws, ordinances and regulations, licenses, permissions, authorizations, consents and permits that it needs to carry out its obligations hereunder, including but not limited to Section 1502 of the Dodd-Frank Act relating to conflict minerals; all provisions of the Copeland Anti-Kickback Act, 18 U.S.C. § 874, as supplemented by the Department of Labor's regulations, 29 C.F.R. part 3; the Foreign Corrupt Practices Act, 15 U.S.C. §§ 78 and other similar anti-bribery laws, including without limitations, the OECD Antibribery Convention and the UK Bribery Act. Buyer warrants and represents that it is familiar with the requirements of the aforementioned laws, that it has not and will not violate those laws as may be amended from time to time, and that it neither has nor will it offer, make or agree to make, directly or indirectly, any gift or payment of any kind or any political contribution in violation of such laws. Buyer agrees to indemnify and hold Seller harmless from and against any and all damages and expenses, including attorneys' fees, resulting from Buyer's violation of the requirements referenced in this section.

Moreover, to the extent where applicable, the parties agree to comply with the following: Federal Labor Standard Act of 1938, as amended; Executive Order 11246, as amended; EEO-1 Reporting; Vietnam Era's Veterans Readjustment Assistance Act; Affirmative Action and Equal Opportunity for Workers with Disabilities, 48 C.F.R. § 52.222-36 and 41 C.F.R. § 60-741.5 and Utilization of Small Business Concerns, 48 C.F.R. § 52.219-8 et. seq., and the implementing rules and regulations of the Office of Federal Contract Compliance including the requirements of 41 CFR §§ 60-1.4(a), 60-300.5(a), and 60-741.5(a). These regulations prohibit discrimination against qualified individuals on the basis of protected Veteran status or disability, prohibit discrimination against all individuals based on their race, color, religion, sex, sexual orientation, gender identity, or national origin, and require affirmative action by covered prime contractors and subcontractors to employ and advance in employment individuals without regard to race, color, religion, sex, sexual orientation, gender identity, national origin, protected veteran status or disability. Likewise, when applicable, Seller and/or its covered subcontractors agree to comply with the provisions of 29 CFR Part 471, Appendix A to Subpart A.

CONFLICT MINERALS
Seller warrants and certifies that: (a) all items supplied or delivered to Buyer under this Purchase Order do not contain one or more identified Conflict Minerals (including but not limited to, coltan, niobium, tantalum, tin, gold, or tungsten), as defined under the Dodd-Frank Wall Street Reform and Consumer Protection Act; (b) sub-suppliers from whom Seller purchases items do not sell items that contain one or more identified Conflict Minerals; and (c) if the items that Seller supplies or delivers to Buyer do contain one or more identified Conflict Minerals, such Conflict Minerals do NOT originate from the Democratic Republic of Congo or an adjoining country. In the event the items Seller supplies or delivers to Buyer contain one or more identified Conflict Minerals, then Seller shall promptly notify Buyer of such.

IMPORT AND EXPORT
The parties have and shall maintain in effect all the licenses, permissions, authorizations, consents, and permits needed to carry out their obligations under the purchase order. The parties shall comply with all export and import laws of all countries involved in the sale and transportation of goods under this purchase order.

NOTICE
Notice required hereunder shall be deemed properly made if in writing and delivered by mail or email (the receipt of which is expressly acknowledged) to the email address set forth in the Purchase Order, by certified U.S. mail (return receipt requested), or by recognized courier service (UPS, FedEx, etc.). Any notice shall be deemed given one (1) business day after being sent.

JURISDICTION AND VENUE
The validity, performance and interpretations of this agreement shall be governed by the substantive laws of the State of Georgia (USA), and without reference to principles of conflicts or choice of laws or the United Nations Convention for the International Sale of Goods. The parties agree that the sole and exclusive jurisdiction and venue for any dispute relating to or arising under this agreement shall be the federal or state courts in the State of Georgia, and both parties hereby submit and consent to the personal jurisdiction of said courts as to any such matters.

FORCE MAJEURE
In the event of any delay in Seller's performance or Seller's inability to perform due to acts of God, war, riot, embargo, acts of civil or military authorities, acts of government, quarantine restriction, pandemic, epidemic, fire, flood, explosion, mill conditions, plant machinery breakdown, differences with workmen, shortage of vehicles, fuel, utility, facility, material or labor, delay in transportation, breakdown or accident, compliance with any other action taken to carry out the intent or purpose of any law or regulation, or other causes beyond Seller's reasonable control, Seller shall not be liable for any direct or indirect damages or loss due to any such causes. In the event of any of the foregoing, Seller may apportion its production and all the materials among its customers as Seller, in its sole discretion, considers equitable.

ENTIRE AGREEMENT
These terms and conditions of sale constitute the entire agreement of the parties and supersede all discussions, arrangements, negotiations, representations, and warranties, if any, relating to the goods or services covered hereby.

February 4th, 2026 | Charles City, IA

PROPOSAL

TOMCO2 Proposal #: 24261

Changing the way you think about CO2.

TOMCO2 SYSTEMS®

CHANGING THE WAY YOU **THINK** ABOUT CO_2

February 4th, 2026

Attn: Charles City, IA

RE: TOMCO2 Proposal Carbon Dioxide Storage Equipment

Spec Section: XXXXX

TOMCO2 Systems is pleased to submit, for your consideration, our proposal covering the carbon dioxide storage system. We have attached equipment specifications to this proposal. Please read our specifications carefully to be certain as to what TOMCO2 is proposing to supply.

We can send general arrangement drawings and submittals for your review eight to twelve (8-12) weeks after our receipt of your purchase order. Shipment of the equipment can be eighteen to twenty (18-20) weeks after our receipt of approved submittals and notice to proceed.

TOMCO2 Systems will warrant the equipment supplied, as described in the attached specifications, for a period of one year past final acceptance.

Field installation will require the following, not provided by TOMCO2:

1) Concrete foundation for the CO2 storage equipment.
2) Anchor bolts for the equipment.
3) Any control or system wiring between our control system or other control panels or components.
4) Liquid or vapor CO2.
5) Unloading of the CO2 equipment at the job-site.
6) Other items as noted in the attached equipment.

The **price** for our equipment, as described in the attached TOMCO2 specification can be provided by your local TOMCO Representative, Jon Harger of Vessco. Jon can be reached by email at jharger@vessco.com.

Our price includes the following:

- Equipment as specified herein.
- Engineering submittals and general arrangement drawings.
- Freight to jobsite, DAP.
- Startup & training, & commissioning of one (1) trip up to two (2) days on site.
- Operating & Maintenance Manuals.
- Standard one year warranty.

PAYMENT TERMS

- 30 % upon order acknowledgment (Net 0)
- 20 % upon submittal approval (Net 30)
- 15 % upon tank hydrostatic test (Net 30)
- 30 % upon equipment delivery or 90 days after agreed upon equipment delivery date on purchase order (Net 30)
- 5 % upon performance test and/or commissioning activities or 150 days from agreed upon equipment delivery date (Net 30)

Our payment terms are net 30 days. Our price will be good for a period of 90 days from the date of this proposal. Price is firm upon receipt of purchase order; however, in the event of unforeseen delays that deviate from the agreed upon production and equipment delivery schedule, pricing is subject to change based on fluctuations in the Producer Price Index (PPI).

It is understood by your acceptance of the TOMCO2 terms and conditions of this letter that retainage is to be paid in full no longer than 30 days from the date of startup of our equipment. Payment of the full invoiced amount less retainage is due after shipment and prior to startup and commissioning of the system.

If you have any questions, please do not hesitate to contact me. Sincerely,

Camila Hess

Camila Hess

Commercial Product
Manager
(c): 678-326-0347
(e): chess@tomcosystems.com

TERMS AND CONDITIONS OF SALE AND LIMITED WARRANTY

SUPERSEDES ALL PREVIOUS TERMS AND CONDITIONS OF SALE

These terms and conditions form a part of and are incorporated into all sales of goods and services by TOMCO2 Systems® Company ("Seller").

ACCEPTANCE OF TERMS AND CONDITIONS

The acceptance of the Terms and Conditions contained herein is an essential prerequisite to any contract of sale made by Seller. NO TERMS OR CONDITIONS OTHER THAN THOSE STATED HEREIN, AND NO AGREEMENT OR UNDERSTANDING, ORAL OR WRITTEN, IN ANY WAY PURPPORTING TO MODIFY THESE TERMS AND CONDITIONS, WHETHER CONTAINED IN BUYER'S PURCHASE OR ACCEPTANCE DOCUMENTS, SHIPPING RELEASE FORMS, OR ELSEWHERE, SHALL BE BINDING ON SELLER WITHOUT SELLER'S EXPRESS WRITTEN CONSENT, ANY SUCH ATTEMPTED MODIFICATIONS ARE HEREBY REJECTED BY SELLER. UNDER ANY AND ALL CIRCUMSTANCES, SELLER'S ACCEPTANCE OF BUYER'S ORDER IS EXPRESSLY CONDITIONED ON BUYER'S ASSET TO THE TERMS AND CONDITIONS CONTAINED HEREIN, AND SELLER OBJECTS TO ANY ADDITIONAL OR DIFFERENT TERMS PROPOSED BY BUYER. NO MODIFICATIONS OF THE TERMS AND CONDITIONS CONTAINED HEREIN SHALL BE BINDING UPON SELLER WITHOUT THE EXPRESS WRITTEN CONSENT OF SELLER. Buyer's action in (a) accepting any goods manufactured and delivered hereunder, or accepting any services from Seller, or (b) accepting or confirming any order without disaffirmance of these terms and conditions within three (3) business days of acceptance or confirmation of the order (and in the case of such disaffirmance no contract shall be deemed to exist between the parties), shall constitute an unqualified acceptance by Buyer of the Terms and Conditions contained herein.

PRICES AND PAYMENT TERMS

Prices quoted as valid for thirty (30) days from the date of quote, unless withdrawn or modified earlier by Seller. All prices are otherwise subject to change without notice, until the order is accepted by Seller. All prices are EXWORKS (Incoterms 2020) Seller's facility in Loganville, Georgia, and risk of loss and title shall transfer to Buyer upon delivery to the carrier, unless otherwise expressly agreed to in writing by the parties. Prices do not include applicable local, state, federal or international taxes, tariffs, or duties (all of which shall be Buyer's responsibility), and do not include any freight costs or insurance unless otherwise agreed to in writing between the parties. The purchase price must be paid upon Seller's tender of delivery or completion of performance of the services, or in accordance with terms otherwise expressly agreed between the parties and as reflected on Seller's invoice, without deductions, set-offs, counterclaims, back charges, or any other charges of whatever nature, unless agreed in writing by Seller. Any credit orders are subject to credit approval. Payment for any agreed upon holdbacks must be paid upon completion of goods or services, but in no event later than nine (9) months after completion. If any invoice or part thereof is not paid when due, Buyer shall pay a finance charge in the amount of 1.5% per month (but not exceeding the maximum interest rate permitted by law).If Seller is required to institute legal proceedings or assign the collection to a collection agency for collection of any invoice or part thereof, Buyer shall be liable for all collection costs including legal fees incurred. Seller retains a purchase money security interest in all goods sold to Buyer until the purchase price is paid in full.

After Seller's confirmation of an Order, Seller's costs for manufacturing, selling, or delivery any Products or Services increase due to changes in exchange rates, taxes, duties, or other governmental charges or due to any material and unforeseen cost increases for materials, consumables, parts, wages, or insurance, Seller shall have the right to change the price for the Products or Services accordingly. Such price changes shall apply for any Products or Services delivered after the implementation of the price change, irrespective of any separate agreement on price and irrespective of when the Order was made. Seller shall without undue delay notify the Buyer of such price increases and the Buyer shall be entitled to cancel any Orders affected by the price increase, provided that such cancellation is made by written notice to Seller within three (3) business days from Seller's notification.

CHANGE ORDERS

Buyers may modify a Purchase Order only if approved by Seller in writing. Change order requests must be in writing and made through Seller's commercial sales department. Change order requests require review and approval by Seller's engineering, material control, manufacturing, and credit departments. Change orders may be subject to price and/or schedule adjustment. Other change order terms may be set forth in the, such as changes in specifications or scope of services, delivery date, delivery location or quantity of goods. A minimum of $100 will be charged for each change order processed. Change orders requiring engineering changes will be assessed at a minimum of $200.

DELIVERY

Seller shall use its best efforts to adhere to the delivery or project completion schedule specified on the order acknowledgment, but delivery or project completion may be subject to change. If Seller believes it will be unable to comply with the delivery or completion schedule, Seller will promptly notify Buyer of the probable length of any anticipated delay and the reason for it and shall continue to notify Buyer of any material change in the delivery. Seller shall not be liable for any damage caused by a delay in delivery or completion, irrespective of the cause of delay. If Seller is unable to comply with the delivery or completion schedule, Seller will exercise reasonable efforts to expedite routing or other factors to minimize such a delay. Any changes in the method of shipment (such as by air freight) will be at Buyer's written direction and expense.

CANCELLATION

Cancellation of order or portions thereof will not be accepted after material has been purchased or fabrication has been started and will subject Buyer to special, direct, indirect, and consequential damages.

CLAIMS

The Seller will not be responsible for handling, storage, demurrage or any other transportation or accessorial service on orders for shipment outside the United States.

TOLERANCE & VARIATIONS

Unless otherwise expressly agreed by Seller in writing, all goods will be subject to tolerances and variations consistent with usual trade practices regarding dimensions, straightness, section, composition and mechanical properties and normal variations in surface and internal conditions and quality and will also be subject to deviations from tolerances and variations consistent with practical testing and inspection methods.

FILINGS

Buyer has no property interest in the goods until shipped. Seller retains a purchase money security interest in goods sold to Buyer until the purchase price is paid in full, and Buyer agrees and authorizes Seller to file a financing statement or any other document(s) that may be necessary to perfect or provide other record notice of Seller's interest in the goods.

DELAY

Seller will not be responsible for any delay in performance due to any reason set out in the Force Majeure clause below.

INSPECTION AND ACCEPTANCE

Buyer will inspect the goods (or any services) immediately upon delivery to the first shipment destination (or the completion of any services) and notify Seller in writing not later than five (5) days after delivery (or the completion of any services, if applicable) of any defects or non-conformities. All goods are deemed to have been accepted if timely notice is not given. Buyer shall notify Seller in writing of any disputes relating to any invoice within fifteen (15) days after the invoice date, specifying the nature of the disputed item. All invoices are deemed to be accepted and undisputed if timely notice is not given.

LIMITED WARRANTY

Seller warrants to the first end use purchaser of all goods sold by Seller or services performed hereunder, that: (i) such goods will be free from defects in Seller's materials and workmanship and will perform in accordance with Seller's standard specifications under normal conditions of installation and use; and (ii) that such services will conform to the contract specifications, for claims that first arise and are reported to Seller within the applicable warranty period as set out below. All warranty coverage periods run from the date of shipment of the goods to the original purchaser or the completion of any services.

Wastewater Treatment Equipment: for a period of twelve (12) months from date of invoice;

All other Equipment: for a period of twelve (12) Months from date of invoice, except pelletizers, block presses, reformers and CM-35 pump, if used, operated, and maintained according to Seller's written instructions will be warranted based on hour usage (2,000 hours).

Other: All other parts, components, accessories, and services are warranted by the Seller for a period of ninety (90) days.

This limited warranty does not cover damage caused by 1) improper installation (except when installation is done by Seller) or operation, the failure to follow Seller's instructions, or the failure to comply with applicable industry or commercial practices relating to the use of any goods or implementation of (or reliance on) any services; 2) misuse or negligence; corrosion, fire, or heat; 3) shipping damage; 4) repairs or attempted repairs by any person other than an authorized service technician; 5) repairs using spare parts not provided by Seller; 6) failure of Buyer or its end user to conduct normal and routine maintenance on goods or components in accordance with the operations manual; 7) improper or unauthorized modifications to goods or components; or 8) accident, catastrophe, or act of God. Further, this limited warranty does not cover or apply to any services, goods, accessories, parts, or attachments which are provided or manufactured by someone other than Seller (such as valves and related fittings, regulators, gauging devices, hoses, and hose-end connections and similar equipment), except that Seller assigns (without recourse) any manufacturers or third-party warranty applicable to such goods.

THE ABOVE EXPRESS LIMITED WARRANTY IS THE SOLE AND EXCLUSIVE WARRANTY PROVIDED BY SELLER, AND THERE ARE NO WARRANTIES WHICH EXTEND BEYOND THE DESCRIPTION ON THE FACE HEREOF. ALL IMPLIED CONDITIONS OR WARRANTIES OF MERCHANTABILITY OR FITNESS FOR A PARTICULAR PRUPOSE ARE EXCLUDED AND DISCLAIMED. In no event shall Seller's liability exceed the original purchase price of the goods or services (less any unpaid portion thereof).

Unless expressly agreed to in writing by Seller, this limited warranty extends only to the first end use purchaser and is not thereafter assignable. Any transfer of the goods by the first end use purchaser during the limited warranty period, voids this limited warranty.

BUYER'S REMEDIES

The SOLE AND EXCLUSIVE REMEDY under this Limited Warranty is the repair or replacement of the goods (or refund of the purchase price if Seller deems the repair or replacement of the goods to be impracticable), or the correction of the services (or a refund of the purchase price if Seller deemed such corrections to be impracticable), at Seller's sole option. Goods should not be returned, repaired, or discarded without Seller's prior written consent.

THE REMEDIES SET FORTH HEREIN ARE EXCLUSIVE. SELLER SHALL NOT BE LIABLE FOR ANY CONSEQUENTIAL, SPECIAL, OR INCIDENTAL DAMAGES, OR OTHER COSTS, EXPENSES OR DAMAGE, INCLUDING HARM TO OTHERS, RESULTING FROM ANY DEFECT OR NON-CONFORMITY OF THE GOODS, OR THE DELIVERY, USE OR FAILURE OF THE GOODS (INCLUDING LOSS OF ANY MATERIALS STORED IN GOODS), OR FROM ANY OTHER CAUSE WHATSOEVER INCLUDING NEGLIGENCE. BY ACCEPTING DELIVERY OF THE GOODS SOLD HEREUNDER, THE BUYER ACCEPTS THIS LIMITATION OR REMEDIES AS REASONABLE AND ENFORCEABLE.

STORAGE FEES

Buyer is responsible for all storage fees incurred to store completed goods or in-process goods that are delayed by Buyer at the then current rate for monthly storage. Extended storage will not be allowed without a temporary storage agreement wherein Buyer acknowledges, (i) the storage rate, (ii) length of storage and (iii) that Seller has no obligation or responsibility for goods other than to keep said goods segregated for Buyer. Payment of goods pursuant to the original purchase order, along with the first month's storage fees, must be provided by Buyer upon signing the storage agreement. Storage is subject to availability. If Buyer breaches such temporary storage agreement, Seller may exercise all rights and purchase money or storage liens it may have under the law. Buyer will be responsible for all insurance on the goods and property tax. The Limited Warranty period is as defined in this document and is NOT extended while the goods are in storage.

WARRANTY CLAIMS

To make a claim under the limited warranty, the Buyer must 1) give Seller written notice within three (3) business days after discovery of a claimed defect; 2) immediately discontinue use of the goods or reliance on the services; and 3) if instructed to do so, return such goods freight prepaid within twenty (20) days to the location specified by Seller for evaluation to validate the warranty claim.

Prior to returning goods to Seller, a returned good authorization number (RGA) must be obtained from the Customer Service Department. Goods must be returned with prepaid transportation charges to:

TOMCO$_2$ SYSTEMS COMPANY
3340 Rosebud Road
Loganville, GA 30052 USA

Returned goods packages must include the following information: 1) Company Name; 2) Company address; 3) Contact name; 4) Contact telephone number/email; 5) Quantity, description, model number and, if applicable, a serial number of each item being returned; 6) reason for return; 7) original Seller sales order number, invoice number or Buyer purchase order number; and 8) RGA number must appear on the shipping label and packing slip.

INTELLECTUAL PROPERTY

All copyrights, patents, trademarks, trade secrets, know-how and other intellectual property or proprietary rights pursuant to the laws of any jurisdiction worldwide ("IP Rights") associated with or relating to the goods shall belong solely and exclusively to Seller. Seller will retain all IP Rights used to create, embodied in, used in, and otherwise relating to the goods and any of their component parts manufactured by Seller, and Buyer shall not acquire any ownership interest in any of Seller's IP Rights. Buyer shall use Seller's IP Rights only in accordance with these terms and conditions of sale and any instructions of Seller. If Buyer acquires any IP Rights in or relating to any goods by operation of law or otherwise, such rights are deemed and are hereby irrevocably assigned to Seller without further action. Buyer shall, at Seller's expense, execute such documents and do such things as are necessary to enable Seller to protect its IP Rights.

COMPLIANCE WITH LAWS

Buyer agrees to abide by all federal, state and local laws, ordinances and regulations, licenses, permissions, authorizations, consents and permits that it needs to carry out its obligations under the Agreement, including but not limited to Section 1502 of the Dodd-Frank Act relating to conflict minerals; all provisions of the Copeland Anti-Kickback Act, 18 U.S.C. § 874, as supplemented by the Department of Labor's regulations, 29 C.F.R. part 3; the Foreign Corrupt Practices Act, 15 U.S.C. §§ 78 and other similar anti-bribery laws, including without limitations, the OECD Antibribery Convention and the UK Bribery Act. Buyer warrants and represents that it is familiar with the requirements of the aforementioned laws, that it has not and will not violate those laws as may be amended from time to time, and that it neither has nor will it offer, make or agree to make, directly or indirectly, any gift or payment of any kind or any political contribution in violation of such laws. Buyer agrees to indemnify and hold Seller harmless from and against any and all damages and expenses, including attorneys' fees, resulting from Buyer's violation of the requirements referenced in this section.

Moreover, to the extent where applicable, the parties agree to comply with the following: Federal Labor Standard Act of 1938, as amended; Executive Order 11246, as amended; EEO-1 Reporting; Vietnam Era's Veterans Readjustment Assistance Act; Affirmative Action and Equal Opportunity for Workers with Disabilities, 48 C.F.R. § 52.222-36 and 41 C.F.R. § 60-741.5 and Utilization of Small Business Concerns, 48 C.F.R. § 52.219-8 et. seq., and the implementing rules and regulations of the Office of Federal Contract Compliance including the requirements of 41 CFR §§ 60-1.4(a), 60-300.5(a), and 60-741.5(a). These regulations prohibit discrimination against qualified individuals on the basis of protected Veteran status or disability, prohibit discrimination against all individuals based on their race, color, religion, sex, sexual orientation, gender identity, or national origin, and require affirmative action by covered prime contractors and subcontractors to employ and advance in employment individuals without regard to race, color, religion, sex, sexual orientation, gender identity, national origin, protected veteran status or disability. Likewise, when applicable, TOMCO and/or its covered subcontractors agree to comply with the provisions of 29 CFR Part 471, Appendix A to Subpart A.

CONFLICT MINERALS

In addition, Seller warrants and certifies that: (a) all items supplied or delivered to Buyer under this Purchase Order do not contain one or more identified Conflict Minerals (including but not limited to, coltan, niobium, tantalum, tin, gold, or tungsten), as defined under the Dodd-Frank Wall Street Reform and Consumer Protection Act; (b) sub-suppliers from whom Seller purchases items do not sell items that contain one or more identified Conflict Minerals; and (c) if the items that Seller supplies or delivers to Buyer do contain one or more identified Conflict Minerals, such Conflict Minerals do NOT originate from the Democratic Republic of Congo or an adjoining country. In the event the items Seller supplies or delivers to Buyer contain one or more identified Conflict Minerals, then Seller shall immediately notify Buyer of such.

IMPORT AND EXPORT

The parties have and shall maintain in effect all the licenses, permissions, authorizations, consents, and permits needed to carry out their obligations under the purchase order. The parties shall comply with all export and import laws of all countries involved in the sale and transportation of goods under this purchase order.

NOTICE

Notice required hereunder shall be deemed properly made if in writing and delivered by mail or email (the receipt of which is expressly acknowledged) to the email address set forth in the Purchase Order, by certified U.S. mail (return receipt requested), or by recognized courier service (UPS, FedEx, etc.). Any notice shall be deemed given one (1) business day after being sent.

JURISDICTION AND VENUE

The validity, performance and interpretations of this Agreement shall be governed by the substantive laws of the State of Georgia (USA), and without reference to principles of conflicts or choice of laws or the United Nations Convention for the International Sale of Goods. The parties agree that the sole and exclusive jurisdiction and venue for any dispute relating to or arising under this Agreement shall be the federal or state courts in the State of Georgia, and both parties hereby submit and consent to the personal jurisdiction of said courts as to any such matters.

FORCE MAJEURE

In the event of any delay in Seller's performance or Seller's inability to perform due to acts of God, war, riots, embargoes, acts of civil or military authorities, acts of government, quarantine restrictions, pandemics, epidemics, fires, floods, explosions, mill conditions, plant machinery breakdowns, differences with workmen, shortage of cars, fuel, utility, facility, material or labor, delay in transportation, breakdown or accident, compliance with any other action taken to carry out the intent or purpose of any law or regulation, or other causes beyond Seller's reasonable control, Seller shall not be liable for any direct or indirect damages or loss due to any such causes. In the event of any of the foregoing, Seller may apportion its production and all the materials among its customers as Seller, in its sole discretion, considers equitable.

ENTIRE AGREEMENT

These terms and conditions of sale constitute the entire agreement of the parties and supersede all discussions, arrangements, negotiations, representations, and warranties, if any, relating to the goods or services covered hereby.

CARBON DIOXIDE STORAGE EQUIPMENT

CHARLES CITY, IA

TOMCO2 Proposal #24261

Revision A

February 4th, 2026

A. Work Included: This section covers the work necessary to furnish the equipment and materials required for the referenced carbon dioxide storage replacement for Charles City, IA.

B. The basic system consists of the following equipment and materials:

1. One (1) 675CA 6-Ton Liquid CO2 Storage Tank

2. One (1) M259CI 9 kW Pressure Building Vaporizer

3. One (1) CVH-4SS 4 kW Vapor Heater

4. One (1) First Stage Pressure Regulator

5. Instrumentation and control equipment as specified herein

MANUFACTURER – TOMCO2 Systems, Loganville, GA, USA. TOMCO2 Systems meets or exceeds the following qualifications:

TOMCO2 Systems has successfully designed and manufactured similar equipment for the proposed application for **over 40 years.**

TOMCO2 Systems maintains a list of over **1700** current successful users of similar systems designed, assembled and furnished by the Manufacturer.

TOMCO2 Systems has the required financial capability to perform the scope of work as specified.
TOMCO2 Systems maintains a qualified technical engineering staff and design office.

TOMCO2 Systems operates a physical plant and employs fabricating personnel to complete the work specified.

TOMCO2 Systems operates an ASME Pressure Vessel Shop and employs certified welders to modify and repair the pressure vessel to ASME standards, inspection and testing as required.

TOMCO2 Systems has and will maintain competent service personnel to service the equipment furnished.

Manufacturer of the liquid oxygen storage and feed system shall be TOMCO2 Systems of Loganville, GA USA.

QUALITY ASSURANCE

The Specifications and applicable Drawings are based on equipment, products, and services offered by TOMCO2 Systems, Loganville, Georgia. Changes in the dimensions, layout, or location of equipment or accessories, or type of accessories required to accommodate alternate carbon dioxide feed system manufacturers and models shall be at the Contractor's expense. Design changes shall be performed by discipline engineers registered in the state of Iowa at Contractor's expense. This includes all civil, structural, mechanical, electrical, or instrumentation and controls changes that may be determined necessary to accommodate the system(s) of other manufacturers. The Contractor shall also be solely responsible for all permit modifications necessary to accommodate an alternate manufacturer's design.

STATEMENT OF CONFORMANCE

The manufacturer of the carbonic acid feed system and carbon dioxide storage equipment shall inspect the completed installation and provide written certification that the system will operate as designed and specified herein.

LIQUID CARBON DIOXIDE STORAGE TANK

One (1) liquid carbon dioxide storage tank shall be provided and designed specifically for liquid carbon dioxide service.

The storage tank shall consist of a welded ***SA-612 normalized carbon steel*** pressure vessel designed and constructed in accordance with Section VIII, Division 1 of the ASME "Code for Unfired Pressure Vessels" with a maximum allowable working pressure of 350 PSIG. A pressure vessel manufactured by a different manufacturer from the tank supplier will not be accepted. It is the intention for the complete storage tank, pressure vessel, and vaporizer to be fabricated by the same manufacturer in the same facility.

The storage tank shall be horizontal C-series with I-beam frame and capable of holding 12,000 pounds of liquid carbon dioxide at 300 PSIG and 0 degrees Fahrenheit. The tank shall have an elliptical manway installed on the rear head for cleaning access and inspection for the pressure vessel as required. A grounding lug shall be provided for release of static electricity to ground. Installation including foundation, elevation, piping, wiring and instrumentation must be performed and strictly adhered to manufacturer recommendations and specifications.

The tank shall be insulated with a minimum of 4 inches of urethane foam insulation, which shall be covered with a 0.063" factory painted white aluminum shell. The ends are to be covered with aluminum performed flanged and dished heads. The thermal conductivity (overall U-factor) for the insulated tank wall shall not be greater than 0.04 Btu per hour per square foot per degree Fahrenheit.

The tank shall be complete with a level indicator calibrated to read in thousand pounds and a 0 to 600 psig pressure gauge, both gaues with 6-inch dials

All necessary schedule 80 pipe connections for filling and withdrawal of CO2 from the storage tank will be provided. Truck unloading capability consisting of CGA forged brass fill and vapor balance fittings, isolation valves will be provided extending through the front of the tank cabinet.

A complete environmentally safe refrigeration system utilizing refrigerant R-459A or approved equal shall be provided with the storage tank that will automatically maintain the storage tank at 0 degrees Fahrenheit and 300 PSIG. The evaporator coil of the refrigeration unit shall be located inside the top portion of the storage tank, with the compressor and air-cooled condensing unit mounted on the frame at the end of the tank. The refrigeration unit shall be equipped with a condensing unit driven by a 1HP, 480 volt, 3 phase scroll compressor and provided with a circuit breaker disconnect

switch, motor starter, and a 120-volt control voltage transformer mounted in a **NEMA 4X type 304L stainless steel** electrical enclosure. A fused disconnect will not be accepted. The control panel will be equipped to provide loss of phase, short circuit, and ground fault protection. The condensing unit will include a sight glass, refrigerant line, solenoid valve, expansion valve and a refrigeration coil mounted internally in the storage tank. Automatic controls shall be provided to start and stop the compressor, thereby controlling the pressure of the CO2 in order to maintain the proper operating pressure (295 psig – 305 psig).

The storage tank shall be protected from being subjected to pressures greater than the maximum allowable working pressure (350 PSIG) by means of two ASME approved safety relief valves operating in conjunction with a three-way switching valve and two bleeder type relief valves.

The tank shall be provided with a pressure switch to sound an alarm automatically in the vent of excessive high or low pressure in the tank. The alarm horn and indicating lights shall be mounted on the refrigeration control panel located on the storage tank. The panel shall be complete with an alarm silence circuit to shut off the audible alarm. **Contacts shall be provided for remote indication of high and low tank pressure alarms.**

All nozzles penetrating the vessel shall be schedule 80**, type 304L stainless steel**. All piping and fittings provided internal to the storage tank system shall be schedule 80 carbon steel. All piping and fittings provided external to the vessel and supplied as part of the storage system shall be **schedule 80 type 304L stainless steel**, with 2,000 psi rated threaded fittings. 316L stainless steel ball valves shall be provided where the connections for the liquid fill, vapor return, process connect to the tank, and where needed to remove and service the vaporizer, without emptying the tank. 1-1/2" liquid CO2 and 1" vapor balance fill couplings shall be standard CGA brass threaded connections for CO2 service and piped to the outside of the enclosure.

The storage tank shall be provided with an enclosure at one end, which shall provide weather protection for the refrigeration unit, vaporizer, vapor heater, pressure regulator, electrical panels, fill valves and other accessories. The enclosure shall consist of a structural frame, which shall be covered with aluminum sheet, minimum thickness of 0.04 inch (1 mm). **The storage tank, enclosure, frame, and other exposed ferrous metal surfaces shall be surface prepped and painted according to TOMCO's standard practices.** All stainless steel surfaces shall be left unpainted.

Adequate vent area shall be provided to allow cooling air circulation for the refrigeration system. Three lockable, hinged doors to provide access to the enclosure shall be provided. The approximate overall tank dimensions are 16.5' long x 6'-2" wide x 8'-1" high. The shipping weight (empty) is approximately 10,500 lbs.

The tank shall be model No. 675CA as manufactured by TOMCO Systems in Loganville, GA.

CARBON DIOXIDE ELECTRIC VAPORIZER

The tank shall be provided with one complete electric vaporizer unit, capable of vaporizing 325 lbs of liquid carbon dioxide per hour at 300 psig. Automatic controls shall be provided to control the vaporizer to maintain the tank pressure above 245 psig. An adjustable differential pressure switch shall activate the vaporizer at 245 psig and shall deactivate the unit at 255 psig. Liquid carbon dioxide shall be drawn off of the bottom tank, with the resulting vapor returning to the top of the tank. A purging valve for easy removal of accumulated impurities, safety controls consisting of a safety relief valve, a thermostat for overheat protection and a fused control circuit for coil protection shall be provided. Electrical requirements shall be 9 kW, 480-volt, 3-phase, 60-Hz, and shall be provided with a circuit breaker with operating handle in **a NEMA 4X type 304L** stainless steel electrical enclosure pre-wired from the Refrigeration panel. The vaporizer shall be supplied as an integral part of the storage tank; pre-piped, pre-wired and pre-insulated and located in the equipment enclosure.

Vaporizer shall be **Model No. M259CI 9 kW** as manufactured by TOMCO Systems of Loganville, GA.

CARBON DIOXIDE VAPOR HEATER

The tank shall be provided with one (1) 4 kW carbon dioxide vapor heater to heat the 0°F CO2 gas to near room temperature. The vapor heater shall be rated for operation at 480 volts single phase, 60 Hz., pre-wired from the Refrigeration panel. The vapor heaters shall be supplied complete with electronic temperature control. Operating control range shall be adjustable from 30° to 110°F. Solid high conductivity aluminum pressure castings containing the electrical resistance heaters and aluminum castings containing the 316L stainless steel tubing for the CO2 vapor shall be provided. An overheat device shall be supplied to shut off the heating element should the temperature reach 200°F. A manual reset button shall be supplied for restarting the heater after the overheat temperature controller has tripped out. The vapor heater shall be pre-piped and pre-wired with a thru-the-door disconnect switch and NEMA 12 **type 304L stainless steel** cover inside the storage tank aluminum control house.

Vapor heater shall be **Model No. CVH4-SS 4 kW** as manufactured by TOMCO Systems of Loganville, GA.

FIRST STAGE PRESSURE REGULATOR

A. One (1) carbon dioxide pressure reducing regulator will be supplied, pre-installed in the CO2 pipeline after the carbon dioxide vapor heater inside the storage tank equipment enclosure. The regulator shall be used to reduce the pressure from approximately 300 psig to 120 psig. The regulator shall have a malleable iron body, aluminum spring case and lower case, nitrile and aluminum valve disc and holder, nylon fabric coated with nitrile diaphragm, 316L stainless steel valve stem and valve stem guide. The outlet pressure of the regulator shall be easily adjusted through the use of an adjustment screw.

B. One (1) pressure gauge, 2-1/2" dial, 0 to 600 psig range, complete with isolation valve, shall be provided for indication of the CO2 pressure downstream of the regulator.

C. One (1) pressure relief valve shall be provided installed in the pipeline prior to the pressure regulator. Relief valve shall be set for 450 psig.

The above components will be factory assembled and all field connection clearly marked. The entire assembly shall be shop tested, calibrated and shipped to the job-site in one shipment. Commissioning, startup, and training in no more than one (1) trip up to two (2) full working days on site total shall be provided. Detailed drawings, parts list, and operating manuals are provided as part of the equipment package. Standard one year equipment warranty applies.

I/O SIGNALS

The following signals shall be exchanged between the CO2 storage and feed equipment and the plant control system (SCADA).

From the liquid CO2 storage tank to plant SCADA:

- CO2 High Pressure Alarm (discrete)
- CO2 Low Pressure Alarm (discrete)

ITEMS NOT INCLUDED

- Foundation, concrete pad or anchor bolts for the equipment.
- Interconnecting CO2 piping between the storage tank and the existing feed PSF panel.
- Electrical wire, junction boxes, disconnects or conduit for the equipment.
- Erection and installation; however, complete erection and installation drawings will be provided.
- Piping supports or wall sleeves for field piping.
- Rigging to unload the equipment at the job-site
- Liquid CO2 for the storage tank.
- Any special fill connections or regulator assemblies required by the CO2 supplier.
- CO2 gas detector.
- Any other instrumentation not specifically listed herein.
- Spare Parts
- PLC controls (hardwired controls only)
- Bid bond, supply bond or any other bonds.
- Taxes, fees, duties, licenses, permits or any other fees.

GENERAL NOTES:

1. EMPTY WEIGHT : 10,000 LBS.
2. NOMINAL WEIGHT CONTENTS (FULL): 12,000 LBS.
3. TOTAL VOLUME: 206 CU. FT. - 1,541 GALLONS
4. MAXIMUM ALLOWABLE WORKING PRESSURE OF VESSEL: 350 PSIG @ 200° F
5. MINIMUM DESIGN METAL TEMPERATURE OF VESSEL: -40° F @ 350 PSIG
6. NOTE: VESSEL NOT INTENDED TO BE FILLED WITH LIQUID CO2 COLDER THAN -20° F
7. LIFTING LUGS ARE TO BE USED ONLY WHEN VESSEL IS EMPTY.
8. PRIOR TO STORAGE TANK INSTALLATION AND OPERATION, THOROUGHLY READ AND COMPLY WITH ALL INSTRUCTIONS IN THE INSTALLATION AND SERVICE MANUAL.

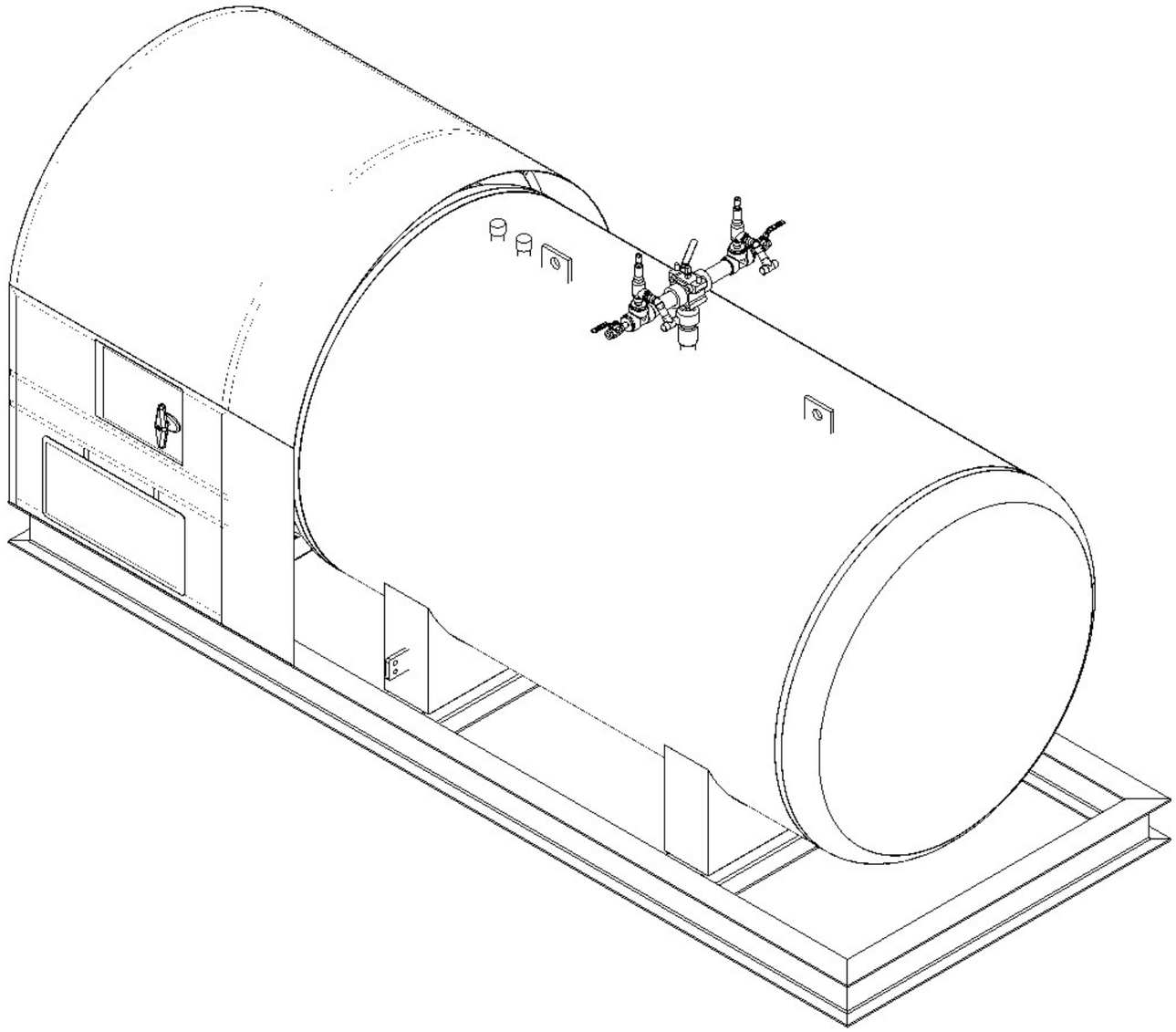

WEIGHT: LBS.

UNLESS OTHERWISE SPECIFIED
INTERPRET DIMENSIONS AND TOLERANCE PER ASME Y14.5-2004 DIMENSIONS ARE IN INCHES (MM)

DIMENSIONAL TOLERANCES:

FRACTIONAL ± 1/64	FILLETS = 0.01 - 0.03
ANGULAR ± 1/4°	RADII = 0.01 - 0.03
XX = ± 0.1	REMOVE ALL BURRS
XXX = ± 0.003	BREAK SHARP
XXXX = ± 0.001	EDGES = 0.01 - 0.03

CONFIDENTIAL - TRADE SECRETS

THE ORIGINAL OF THIS DRAWING IS THE EXCLUSIVE PROPERTY OF TOMCO2 SYSTEMS. THE ACCEPTANCE OF THIS PRINT CONSTITUTES AN AGREEMENT THAT IT SHOULD BE TREATED AS A STRICTLY CONFIDENTIAL DOCUMENT TO BE USED FOR NO PURPOSE OTHER THAN TO AID IN THE ASSEMBLY OR OPERATION OF UNITS FURNISHED BY TOMCO2 SYSTEMS OR AS EXPRESSLY AUTHORIZED IN WRITING BY TOMCO2 SYSTEMS AND THAT IT IS NOT TO BE COMMUNICATED, DISCLOSED, OR COPIED, EXCEPT AS EXPRESSLY AUTHORIZED IN WRITING BY TOMCO2 SYSTEMS

LEGACY PART NO.:

DRAWN BY: NAGA GOPI	DATE: 02/11/2021
CHECKED BY: CAMILA CANDO	DATE: 02/22/2021
APPROVED BY: AL HAMILTON	DATE: 02/22/2021

GENERAL NOTES

TOMCO2 SYSTEMS
3340 ROSEBUD ROAD
LOGANVILLE, GA 30052

DWG. NO.: 2000576 REV: --

SIZE: B SCALE: 1:32 SHEET: 2 OF 9

TITLEBLOCK REVISION: -

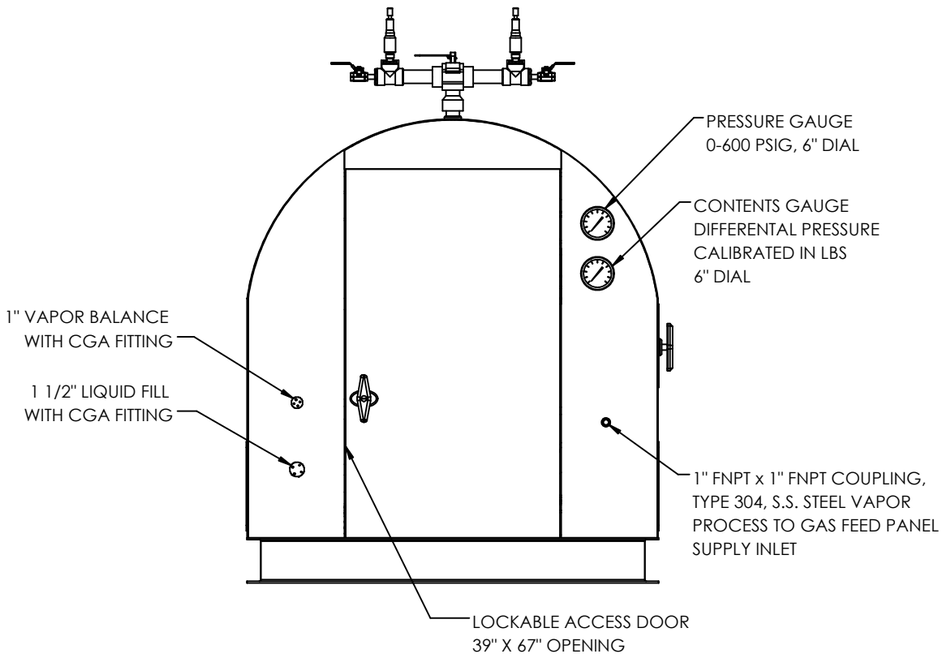

FRONT ELEVATION

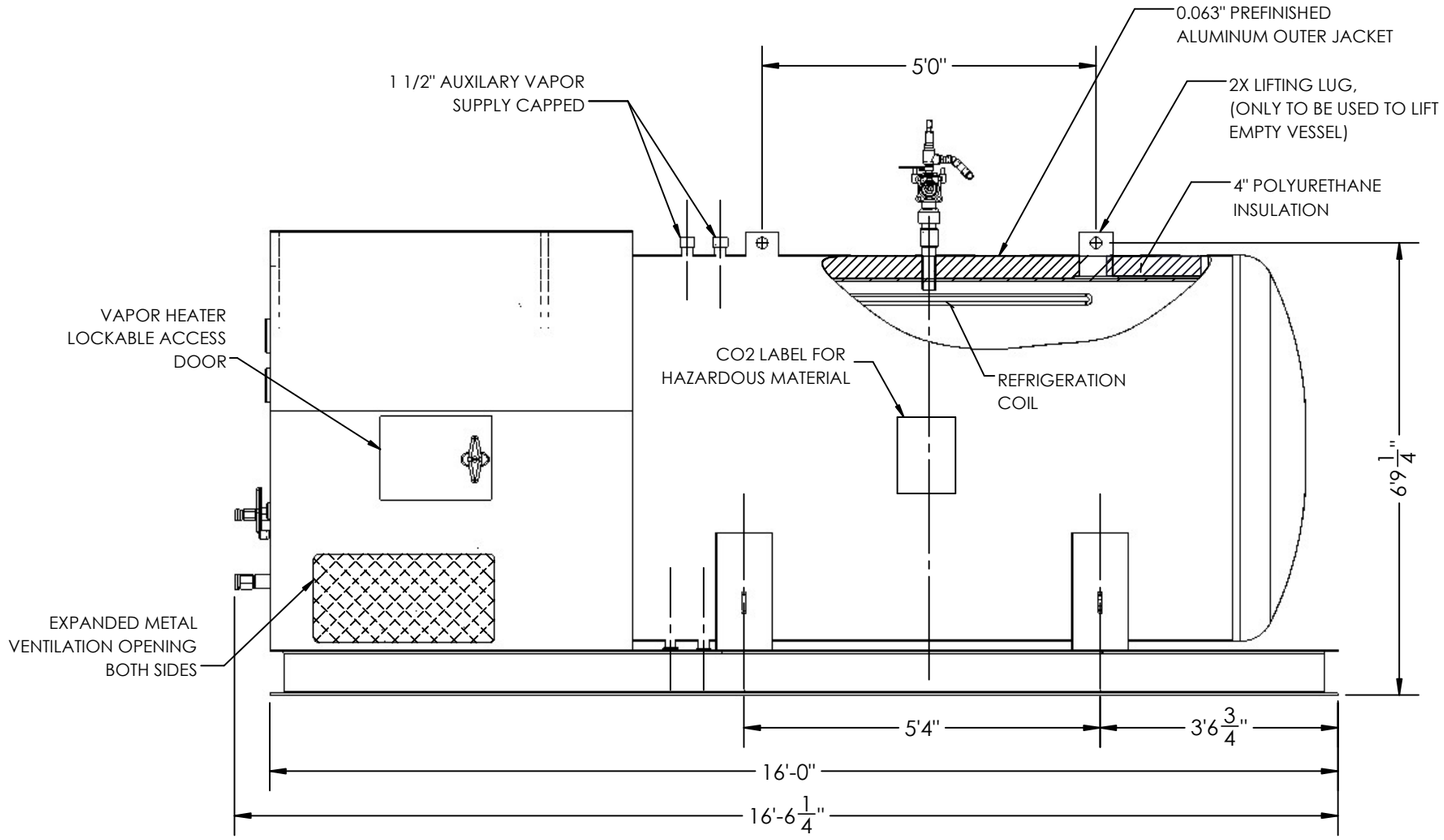

SIDE ELEVATION

TANK GENERAL ARRANGEMENT

WEIGHT:
LBS.

UNLESS OTHERWISE SPECIFIED
INTERPRET DIMENSIONS AND TOLERANCE PER
ASME Y14.5-2004 DIMENSIONS ARE IN INCHES (MM)
DIMENSIONAL TOLERANCES:

FRACTIONAL ± 1/64	FILLETS = 0.01 - 0.03
ANGULAR ± 1/4°	RADII = 0.01 - 0.03
XX = ± 0.1	REMOVE ALL BURRS
XXX = ± 0.003	BREAK SHARP
XXXX = ± 0.001	EDGES = 0.01 - 0.03

CONFIDENTIAL - TRADE SECRETS

THE ORIGINAL OF THIS DRAWING IS THE EXCLUSIVE PROPERTY OF TOMCO2 SYSTEMS. THE ACCEPTANCE OF THIS PRINT CONSTITUTES AN AGREEMENT THAT IT SHOULD BE TREATED AS A STRICTLY CONFIDENTIAL DOCUMENT TO BE USED FOR NO PURPOSE OTHER THAN TO AID IN THE ASSEMBLY OR OPERATION OF UNITS FURNISHED BY TOMCO2 SYSTEMS OR AS EXPRESSLY AUTHORIZED IN WRITING BY TOMCO2 SYSTEMS AND THAT IT IS NOT TO BE COMMUNICATED, DISCLOSED, OR COPIED, EXCEPT AS EXPRESSLY AUTHORIZED IN WRITING BY TOMCO2 SYSTEMS

LEGACY PART NO.:

DRAWN BY: NAGA GOPI	DATE: 02/11/2021
CHECKED BY: CAMILA CANDO	DATE: 02/22/2021
APPROVED BY: AL HAMILTON	DATE: 02/22/2021

TANK GENERAL ARRANGEMENT

TOMCO2 SYSTEMS
3340 ROSEBUD ROAD
LOGANVILLE, GA 30052

DWG. NO.: 2000576		REV: --
SIZE: B	SCALE: 1:32	SHEET: 3 OF 9

TITLEBLOCK REVISION: -

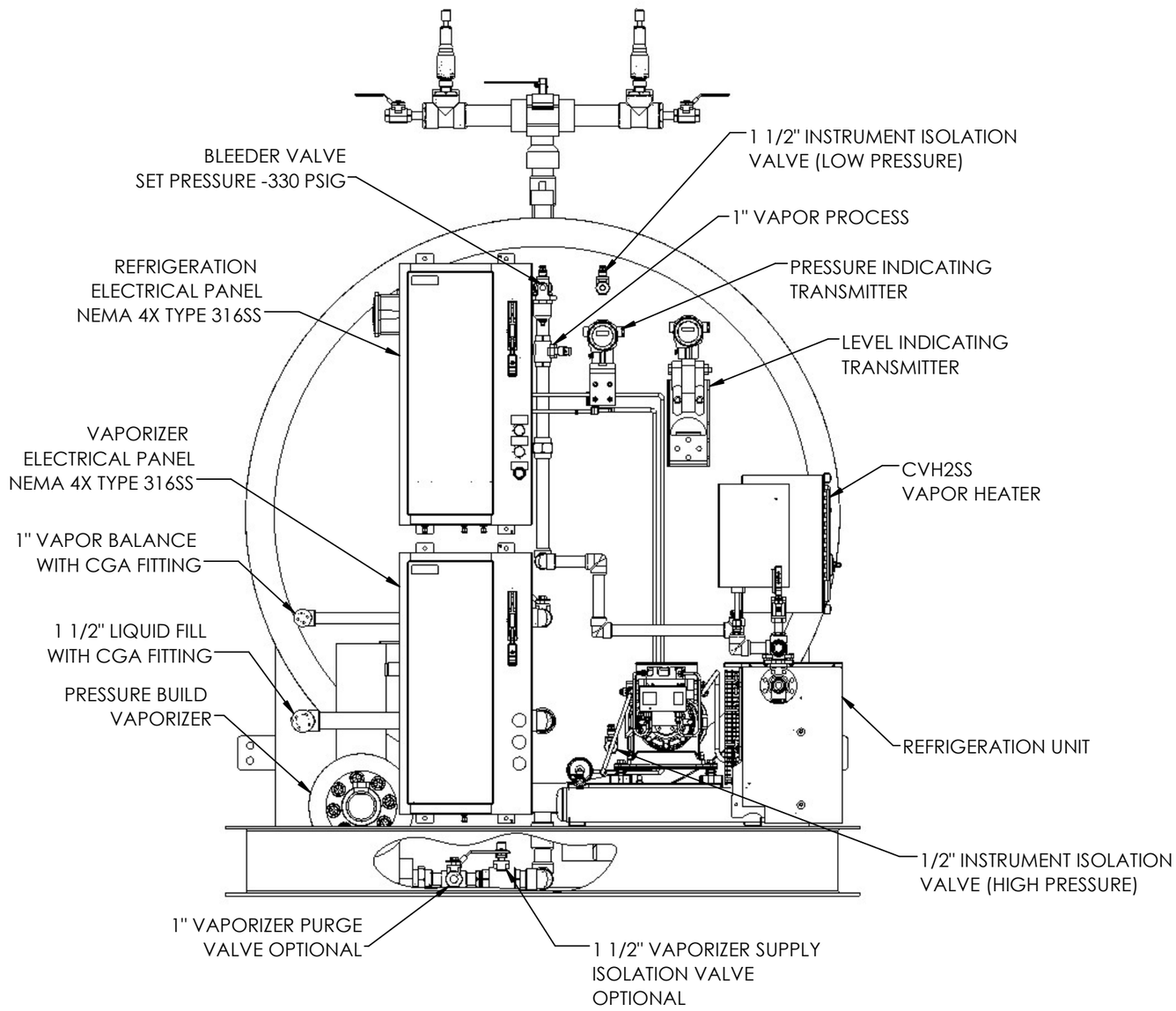

COMPONENT ARRANGEMENT DETAILS

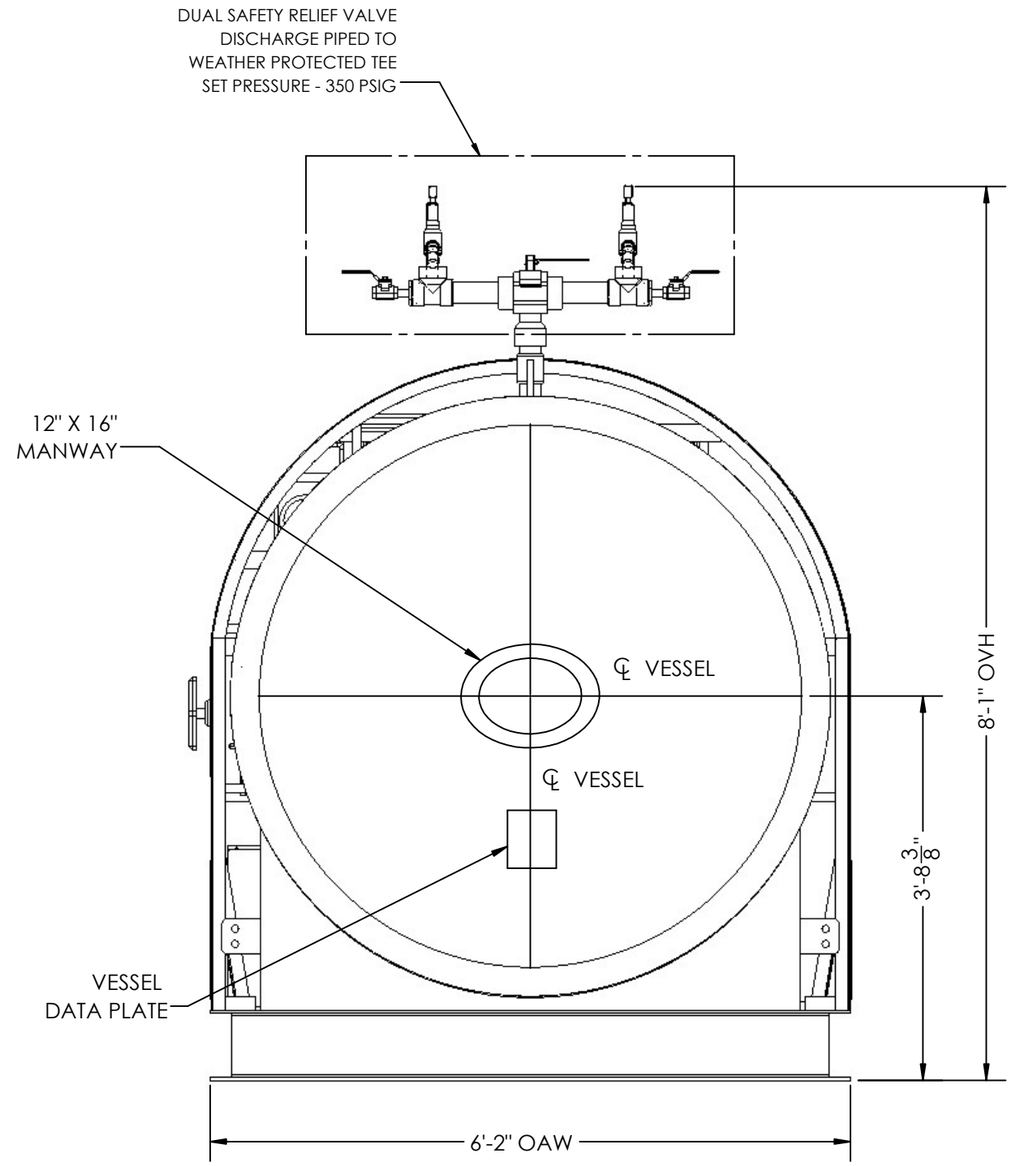

REAR VIEW

WEIGHT: LBS.

UNLESS OTHERWISE SPECIFIED
INTERPRET DIMENSIONS AND TOLERANCE PER ASME Y14.5-2004 DIMENSIONS ARE IN INCHES (MM)
DIMENSIONAL TOLERANCES:

FRACTIONAL ± 1/64	FILLETS = 0.01 - 0.03
ANGULAR ± 1/4°	RADII = 0.01 - 0.03
XX = ± 0.1	REMOVE ALL BURRS
XXX = ± 0.003	BREAK SHARP
XXXX = ± 0.001	EDGES = 0.01 - 0.03

CONFIDENTIAL - TRADE SECRETS

THE ORIGINAL OF THIS DRAWING IS THE EXCLUSIVE PROPERTY OF TOMCO2 SYSTEMS. THE ACCEPTANCE OF THIS PRINT CONSTITUTES AN AGREEMENT THAT IT SHOULD BE TREATED AS A STRICTLY CONFIDENTIAL DOCUMENT TO BE USED FOR NO PURPOSE OTHER THAN TO AID IN THE ASSEMBLY OR OPERATION OF UNITS FURNISHED BY TOMCO2 SYSTEMS OR AS EXPRESSLY AUTHORIZED IN WRITING BY TOMCO2 SYSTEMS AND THAT IT IS NOT TO BE COMMUNICATED, DISCLOSED, OR COPIED, EXCEPT AS EXPRESSLY AUTHORIZED IN WRITING BY TOMCO2 SYSTEMS

LEGACY PART NO.:

DRAWN BY: NAGA GOPI	DATE: 02/11/2021
CHECKED BY: CAMILA CANDO	DATE: 02/22/2021
APPROVED BY: AL HAMILTON	DATE: 02/22/2021

TANK GENERAL ARRANGEMENT

TOMCO2 SYSTEMS
3340 ROSEBUD ROAD
LOGANVILLE, GA 30052

DWG. NO.: 2000576 REV: --

SIZE: B SCALE: 1:32 SHEET: 4 OF 9

TITLEBLOCK REVISION: -

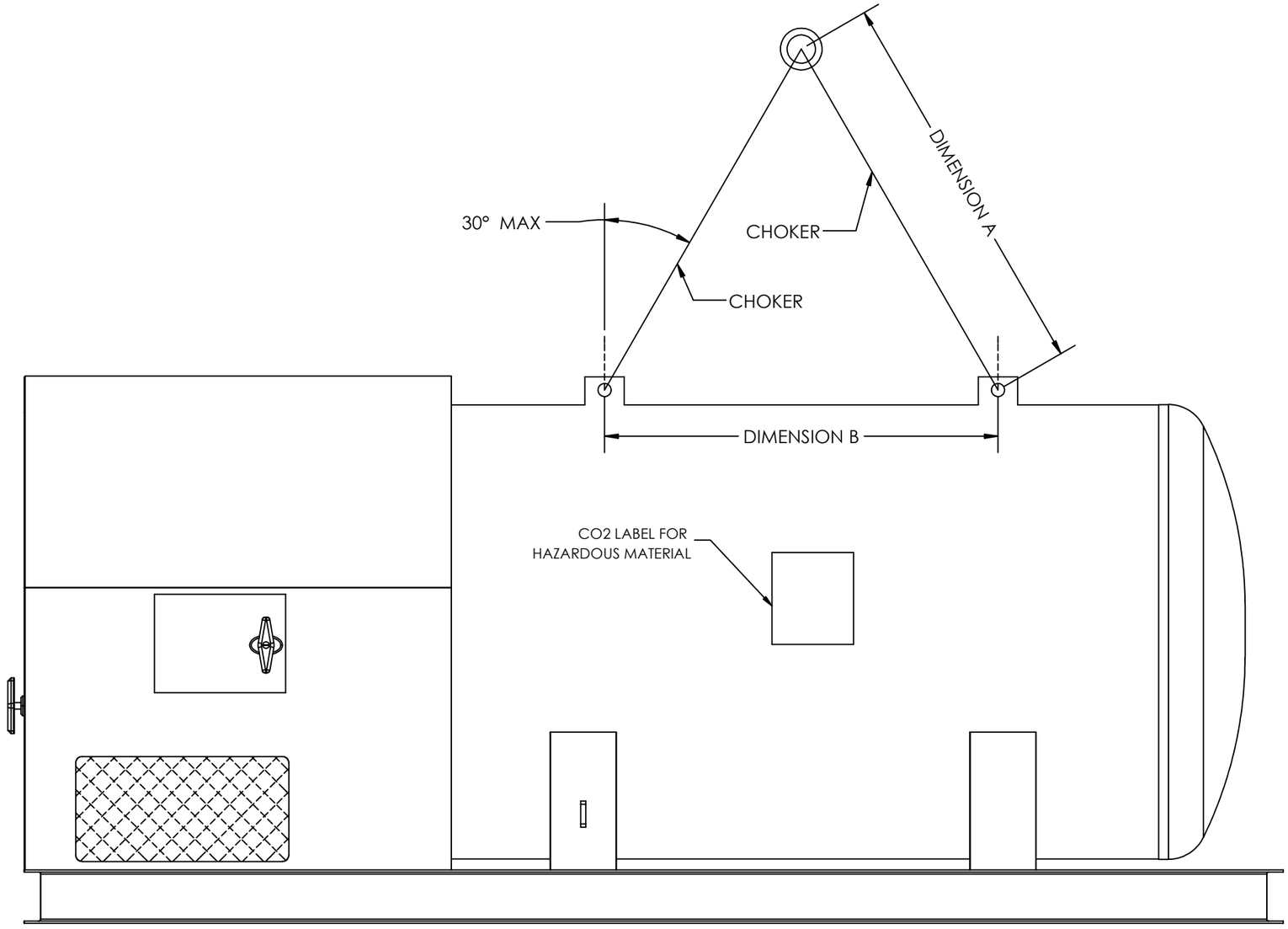

INSTALLATION NOTES:-

1. THE OWNER/INSTALLATION CONTRACTOR IS TO OBTAIN THE SERVICES OF A REGISTERED CIVIL/STRUCTURAL ENGINEER TO PROVIDE A FOUNDATION DESIGN. THE REGISTERED ENGINEER SHALL BE FAMILIAR WITH REGULATORY REQUIREMENTS AT THE INSTALLATION SITE, INCLUDING CONTROLLING BUILDING CODES, SOIL BEARING PRESSURE, SEISMIC OR WIND CRITERIA, EXTREME FROST PENETRATION, FLOODING AND OTHER SPECIFIC DESIGN REQUIREMENTS WHICH APPLY.
2. THE FOUNDATION SHOULD BE PROPORTIONED, TESTED, MIXED, INSTALLED AND CURED IN ACCORDANCE WITH CONTROLLING BUILDING CODES AND ACCEPTED CONCRETE DESIGN/CONSTRUCTION CODES PRIOR TO INSTALLATION.
3. ANCHOR BOLT SIZING & INSTALLATION AS SPECIFIED ON FOUNDATION LOAD DRAWING
4. APPROXIMATE WEIGHT EMPTY: 10,000 LBS.
5. DIMENSION A (MINIMUM LENGTH OF CHOKER TO USE) MUST BE GREATER THAN OR EQUAL TO DIMENSION B (LIFTING LUG CENTER TO LIFTING LUG CENTER DIMENSION)

WEIGHT: LBS.

UNLESS OTHERWISE SPECIFIED
INTERPRET DIMENSIONS AND TOLERANCE PER ASME Y14.5-2004 DIMENSIONS ARE IN INCHES (MM)
DIMENSIONAL TOLERANCES:

FRACTIONAL ± 1/64	FILLETS = 0.01 - 0.03
ANGULAR ± 1/4°	RADII = 0.01 - 0.03
XX = ± 0.1	REMOVE ALL BURRS
XXX = ± 0.003	BREAK SHARP
XXXX = ± 0.001	EDGES = 0.01 - 0.03

CONFIDENTIAL - TRADE SECRETS
THE ORIGINAL OF THIS DRAWING IS THE EXCLUSIVE PROPERTY OF TOMCO2 SYSTEMS. THE ACCEPTANCE OF THIS PRINT CONSTITUTES AN AGREEMENT THAT IT SHOULD BE TREATED AS A STRICTLY CONFIDENTIAL DOCUMENT TO BE USED FOR NO PURPOSE OTHER THAN TO AID IN THE ASSEMBLY OR OPERATION OF UNITS FURNISHED BY TOMCO2 SYSTEMS OR AS EXPRESSLY AUTHORIZED IN WRITING BY TOMCO2 SYSTEMS AND THAT IT IS NOT TO BE COMMUNICATED, DISCLOSED, OR COPIED, EXCEPT AS EXPRESSLY AUTHORIZED IN WRITING BY TOMCO2 SYSTEMS

LEGACY PART NO.:

DRAWN BY: NAGA GOPI	DATE: 02/11/2021
CHECKED BY: CAMILA CANDO	DATE: 02/22/2021
APPROVED BY: AL HAMILTON	DATE: 02/22/2021

TANK GENERAL ARRANGEMENT

TOMCO2 SYSTEMS
3340 ROSEBUD ROAD
LOGANVILLE, GA 30052

DWG. NO.: 2000576 REV: --
SIZE: B SCALE: 1:32 SHEET: 5 OF 9

TITLEBLOCK REVISION: -

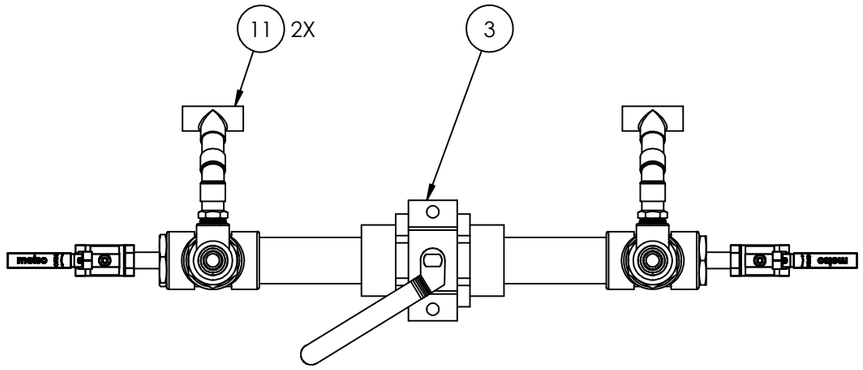

TOP VIEW

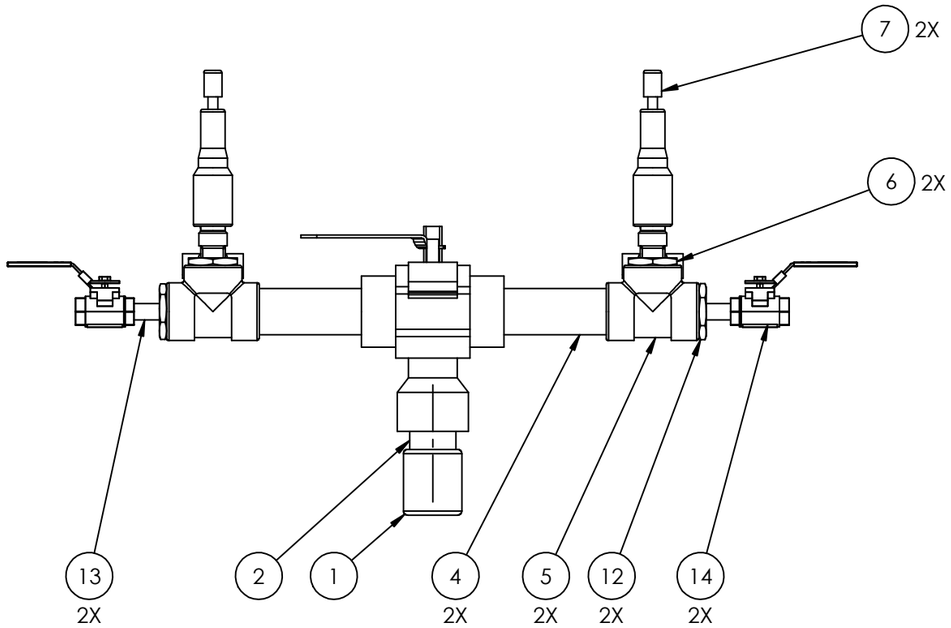

FRONT VIEW

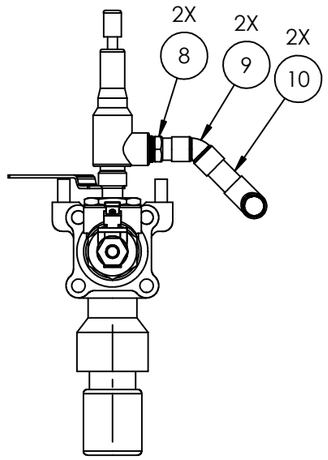

SIDE VIEW

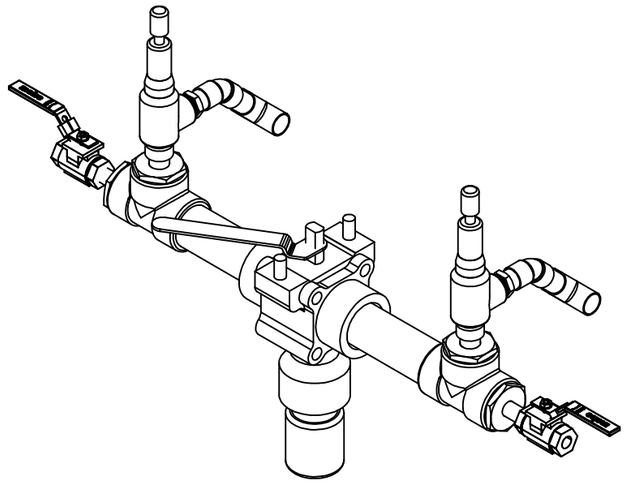

ISOMETRIC VIEW

2" OUTLET DUAL SRV STANDARD MODEL C&E (SPRING)

PARTS LIST

ITEM	PART NUMBER	DESCRIPTION	QTY.
1		CLASS 3000 COUPLING, 2.00 IN	1
2		NIPPLE, CLOSED X 2, SCH80, SA312T304, SMLS, TBE	1
3		2" SS WORC. DIVERTER VALVE	1
4		NIPPLE, 2.00X6, SCH 80, SA312T304,SMLS, TBE	2
5		CLASS 2000 THREADED TEE, 2.00 IN	2
6		BUSHING, HX, 2.00 X 0.75, 3000LB, A182F304	2
7		SAFETY,3/4", PN 83S1M68-8-CO2-T,350 PSI	2
8		1-1/8" SWT X 1" MPT ADAPTER	2
9		1-1/8" FTGXC COPPER 45ELL	2
10		1-1/8" PIPE 3" LG	2
11		1-1/8" COPPER TEE	2
12		BUSHING, HX, 2.00 X 0.50, 3000LB, A182F304	2
13		PIPE, SS, SA312-304/304L, 1/2"-SCH 80	2
14		JAMESBURY ELIMINATOR,1/2" 9FB3500XTBTE	2

WEIGHT: LBS.

UNLESS OTHERWISE SPECIFIED
INTERPRET DIMENSIONS AND TOLERANCE PER ASME Y14.5-2004 DIMENSIONS ARE IN INCHES (MM)
DIMENSIONAL TOLERANCES:

FRACTIONAL ± 1/64	FILLETS = 0.01 - 0.03
ANGULAR ± 1/4°	RADII = 0.01 - 0.03
XX = ± 0.1	REMOVE ALL BURRS
XXX = ± 0.003	BREAK SHARP
XXXX = ± 0.001	EDGES = 0.01 - 0.03

CONFIDENTIAL - TRADE SECRETS

THE ORIGINAL OF THIS DRAWING IS THE EXCLUSIVE PROPERTY OF TOMCO2 SYSTEMS. THE ACCEPTANCE OF THIS PRINT CONSTITUTES AN AGREEMENT THAT IT SHOULD BE TREATED AS A STRICTLY CONFIDENTIAL DOCUMENT TO BE USED FOR NO PURPOSE OTHER THAN TO AID IN THE ASSEMBLY OR OPERATION OF UNITS FURNISHED BY TOMCO2 SYSTEMS OR AS EXPRESSLY AUTHORIZED IN WRITING BY TOMCO2 SYSTEMS AND THAT IT IS NOT TO BE COMMUNICATED, DISCLOSED, OR COPIED, EXCEPT AS EXPRESSLY AUTHORIZED IN WRITING BY TOMCO2 SYSTEMS

LEGACY PART NO.:

DRAWN BY: NAGA GOPI	DATE: 02/11/2021
CHECKED BY: CAMILA CANDO	DATE: 02/22/2021
APPROVED BY: AL HAMILTON	DATE: 02/22/2021

2" OUTLET DUAL SRV STANDARD MODEL C&E (SPRING)

TOMCO2 SYSTEMS
3340 ROSEBUD ROAD
LOGANVILLE, GA 30052

DWG. NO.: 083MC-DSA-SS W/BLOW DOWN
REV: --
SIZE: B
SCALE: 1:8
SHEET: 8 OF 9

TITLEBLOCK REVISION: -

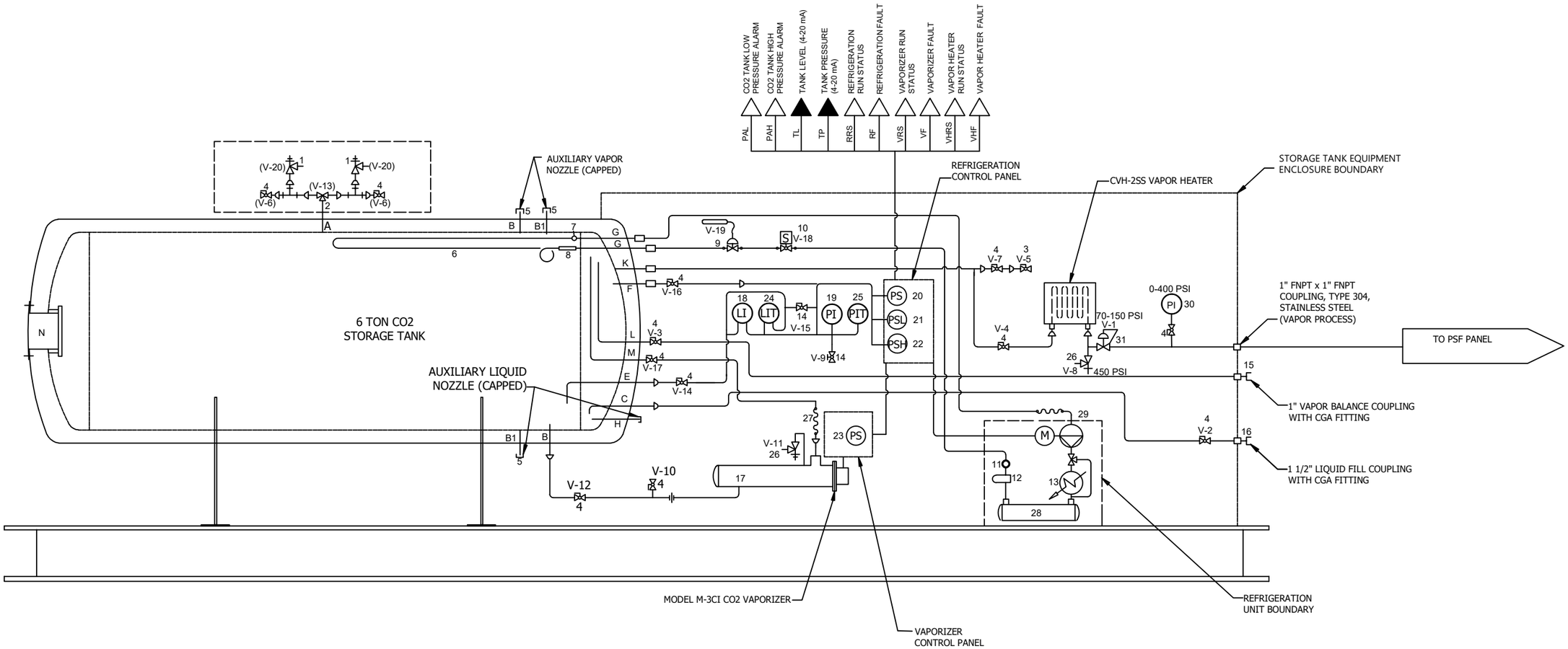

GENERAL NOTES:

1. ALL PIPING SHALL BE SEAMLESS SCHEDULE 80 PIPE.
2. ALL FORGED STEEL FITTINGS SHALL BE 2000# RATING OR HIGHER

UNLESS OTHERWISE SPECIFIED
INTERPRET DIMENSIONS AND TOLERANCE PER ASME Y14.5-2004 DIMENSIONS ARE IN INCHES (MM)

DIMENSIONAL TOLERANCES:

FRACTIONAL ± 1/64
ANGULAR ± 1/4°
XX = ± 0.1
XXX = ± 0.003
XXXX = ± 0.001

FILLETS = 0.01 - 0.03
RADII = 0.01 - 0.03
REMOVE ALL BURRS
BREAK SHARP
EDGES = 0.01 - 0.03

×CONFIDENTIAL - TRADE SECRETS×
THE ORIGINAL OF THIS DRAWING IS THE EXCLUSIVE PROPERTY OF TOMCO2 SYSTEMS. THE ACCEPTANCE OF THIS PRINT CONSTITUTES AN AGREEMENT THAT IT SHOULD BE TREATED AS A STRICTLY CONFIDENTIAL DOCUMENT TO BE USED FOR NO PURPOSE OTHER THAN TO AID IN THE ASSEMBLY OR OPERATION OF UNITS FURNISHED BY TOMCO2 SYSTEMS OR AS EXPRESSLY AUTHORIZED IN WRITING BY TOMCO2 SYSTEMS AND THAT IT IS NOT TO BE COMMUNICATED, DISCLOSED, OR COPIED, EXCEPT AS EXPRESSLY AUTHORIZED IN WRITING BY TOMCO2 SYSTEMS

LEGACY PART NO.:	
DRAWN BY: NAGA GOPI	DATE: 09-Nov-2020
CHECKED BY: CAMILA CANDO	DATE: 02/22/2021
APPROVED BY: AL HAMILTON	DATE: 02/22/2021
PIPING SCHEMATIC	

TOMCO2 SYSTEMS
3340 ROSEBUD ROAD
LOGANVILLE, GA 30052

DWG. NO: 63317PS		REV: --
SIZE: B	SCALE: NTS	SHEET: 1 OF 2

TITLEBLOCK REVISION: -

VALVE NO. / SERVICE			
V-1	1" PRESSURE REGULATOR	V-11	1/2" VAPORIZER PRESSURE RELIEF
V-2	1 1/2" LIQUID FILL	V-12	1" VAPORIZER LIQUID ISOLATION
V-3	1" VAPOR BALANCE	V-13	2" VESSEL SAFETY RELIEF DIVERTER VALVE
V-4	1" VAPOR PROCESS	V-14	1/2" INSTRUMENTATION ISOLATION HIGH PRESSURE
V-5	3/8" PRESSURE BLEED OFF 330 PSIG SET PRESSURE	V-15	1/4" INSTRUMENTATION EQUILIZATION
V-6	1/2" SRV DRAIN VALVES	V-16	1/2" INSTRUMENTATION ISOLATION LOW PRESSURE
V-7	1/2" BLEEDER ISOLATION VALVE	V-17	2" VAPORIZER ISOLATION
V-8	1/2" RELIEF VALVE 450 PSI	V-18	3/8" REFRIGERATION SOLENOID
V-9	1/4" INSTRUMENT BLOW-DOWN VALVE	V-19	3/8" REFRIGERATION EXPANSION
V-10	1" VAPORIZER BLOW-DOWN	V-20	3/4" X 1" VESSEL SAFETY RELIEF

PENETRATION / NOMINAL SIZE				
NOZZLE	QTY	SIZE	NOTES	USE
A	1	2"	THD.OUT	SAFETY
B	2	1 1/2"	THD. OUT	AUX. LIQUID/VAPOR
B1	2	1 1/2"	THD. OUT	AUX. LIQUID/VAPOR
C	1	2" (GRIND FLUSH)	THD. IN/OUT	LIQUID FILL
E	1	1/2"	THD. IN/OUT	HP INSTRUMENT
F	1	1/2"	THD. OUT	LP INSTRUMENT
G	2	1 1/4"	COUPLING OUT	REFRIGERATION
H	1	1"	THD. OUT	LIQUID USE
K	1	1"	THD. OUT	VAPOR PROCESS
L	1	1 1/2"	THD. OUT	VAPOR BALANCE
M	1	2"	THD. IN/OUT	VAPOR RETURN
N	1	12" X 16" ELLIPTICAL MANWAY		

LEGEND			
ITEM NO.	DESCRIPTION	ITEM NO.	DESCRIPTION
1	MAIN SAFETY RELIEF VALVEANDERSON-GREENWOOD, MODEL 83S1M68-8-SPL	17	ELECTRICAL PRESSURE BUILD CO2 VAPORIZER
2	2" DIVERTER VALVE	18	LIQUID LEVEL GAUGE
3	BLEEDER VALVE	19	PRESSURE GAUGE 6" DIAL, 0 - 600 PSIG RANGE
4	MANUAL BALL VALVE - DESIGNED FOR CO2 SERVICE WITH STANDARD PORT	20	HIGH PRESSURE ALARM SWITCH
5	PIPE CAP ANSI 3000#	21	LOW PRESSURE ALARM SWITCH
6	COPPER REFRIGERATION COIL TYPE L (ARC)	22	REFRIGERATION PRESSURE SWITCH
7	REFRIGERATION MANIFOLD	23	VAPORIZER PRESSURE SWITCH
8	REFRIGERATION COIL DISTRIBUTOR	24	LEVEL INDICATING TRANSMITTER
9	EXPANSION VALVE	25	PRESSURE INDICATING TRANSMITTER
10	SOLENOID VALVE	26	SAFETY RELIEF VALVE 450 PSI
11	SIGHT GLASS	27	FLEX CONNECTOR
12	FILTER DRIER	28	REFRIGERATION UNIT: Copeland model NO. CJAL-0100-TAD-160 1HP,460V, 60 CYCLE,3Ph
13	CONDENSING UNIT	29	PACKLESS VIBRATION ABSORBER
14	DIAPHRAGM VALVE	30	PRESSURE GAUGE 0-400 PSI
15	1" CGA COUPLING	31	PRESSURE REGULATOR
16	1 1/2" CGA COUPLING		

TANK GENERAL NOTES:

1. REFER TO THE PROJECT DRAWINGS AND SPECIFICATIONS FOR COMPLETE PIPING AND EQUIPMENT INSTALLATION REQUIREMENTS. THIS DRAWING SHOWS ONLY THE RELATIONSHIP BETWEEN VARIOUS PIECES OF TOMCO2 SUPPLIED EQUIPMENT, AND INDICATES CERTAIN SYSTEM REQUIREMENTS, WHICH MAY NOT BE REFLECTED BY THE PROJECT DRAWINGS.
2. THE LIQUID CARBON DIOXIDE STORAGE TANK MODEL 675CA AND RELATED EQUIPMENT SHALL INCLUDE A PRESSURE VESSEL DESIGNED AND CONSTRUCTED IN ACCORDANCE WITH SECTION VIII OF THE ASME "CODE FOR UNFIRED PRESSURE VESSELS".
3. THE INNER PRESSURE VESSEL OF THE STORAGE TANK SHALL BE FABRICATED FROM ASME SA612, CARBON STEEL PLATE.
4. UNLESS OTHERWISE NOTED, ALL NOZZLES WHICH PENETRATE THE INNER PRESSURE VESSEL SHELL FOR PIPING CONNECTIONS SHALL BE SEAMLESS SCHEDULE 80 STAINLESS STEEL TYPE 304 PIPE .
5. UNLESS OTHERWISE NOTED, ALL PIPING BETWEEN MAJOR COMPONENTS/ASSEMBLIES SHALL BE SEAMLESS SCHEDULE 80 STAINLESS STEEL PIPE TYPE 304 .
6. SCREWED AND SOCKET WELD PIPE FITTINGS IN THE PIPING BETWEEN MAJOR COMPONENTS/ASSEMBLIES SHALL BE STAINLESS STEEL TYPE 304, 2000 LB (MINIMUM).
7. BUTT-WELDED FITTINGS IN THE PIPING BETWEEN MAJOR COMPONENTS ASSEMBLIES SHALL BE SCHEDULE 80, STAINLESS STEEL TYPE 304.
8. TOMCO2 SUPPLIED EQUIPMENT SHALL BE TAGGED WITH IDENTIFICATION NUMBERS CORRESPONDING TO THOSE FOUND ON THIS DRAWING, OR AS DIRECTED BY THE PROJECT DRAWINGS AND/OR SPECIFICATIONS.

WEIGHT: LBS.

UNLESS OTHERWISE SPECIFIED
INTERPRET DIMENSIONS AND TOLERANCE PER ASME Y14.5-2004 DIMENSIONS ARE IN INCHES (MM)
DIMENSIONAL TOLERANCES:
FRACTIONAL ± 1/64
ANGULAR ± 1/4°
XX = ± 0.1
XXX = ± 0.003
XXXX = ± 0.001
FILLETS = 0.01 - 0.03
RADII = 0.01 - 0.03
REMOVE ALL BURRS
BREAK SHARP
EDGES = 0.01 - 0.03

CONFIDENTIAL - TRADE SECRETS
THE ORIGINAL OF THIS DRAWING IS THE EXCLUSIVE PROPERTY OF TOMCO2 SYSTEMS. THE ACCEPTANCE OF THIS PRINT CONSTITUTES AN AGREEMENT THAT IT SHOULD BE TREATED AS A STRICTLY CONFIDENTIAL DOCUMENT TO BE USED FOR NO PURPOSE OTHER THAN TO AID IN THE ASSEMBLY OR OPERATION OF UNITS FURNISHED BY TOMCO2 SYSTEMS OR AS EXPRESSLY AUTHORIZED IN WRITING BY TOMCO2 SYSTEMS AND THAT IT IS NOT TO BE COMMUNICATED, DISCLOSED, OR COPIED, EXCEPT AS EXPRESSLY AUTHORIZED IN WRITING BY TOMCO2 SYSTEMS

LEGACY PART NO.:
DRAWN BY: NAGA GOPI — DATE: 09-Nov-2020
CHECKED BY: CAMILA CANDO — DATE: 02/22/2021
APPROVED BY: AL HAMILTON — DATE: 02/22/2021

PIPING SCHEMATIC

TOMCO2 SYSTEMS
3340 ROSEBUD ROAD
LOGANVILLE, GA 30052

DWG. NO.: 63317PS — REV: --
SIZE: B — SCALE: NTS — SHEET: 2 OF 2

TITLEBLOCK REVISION: -